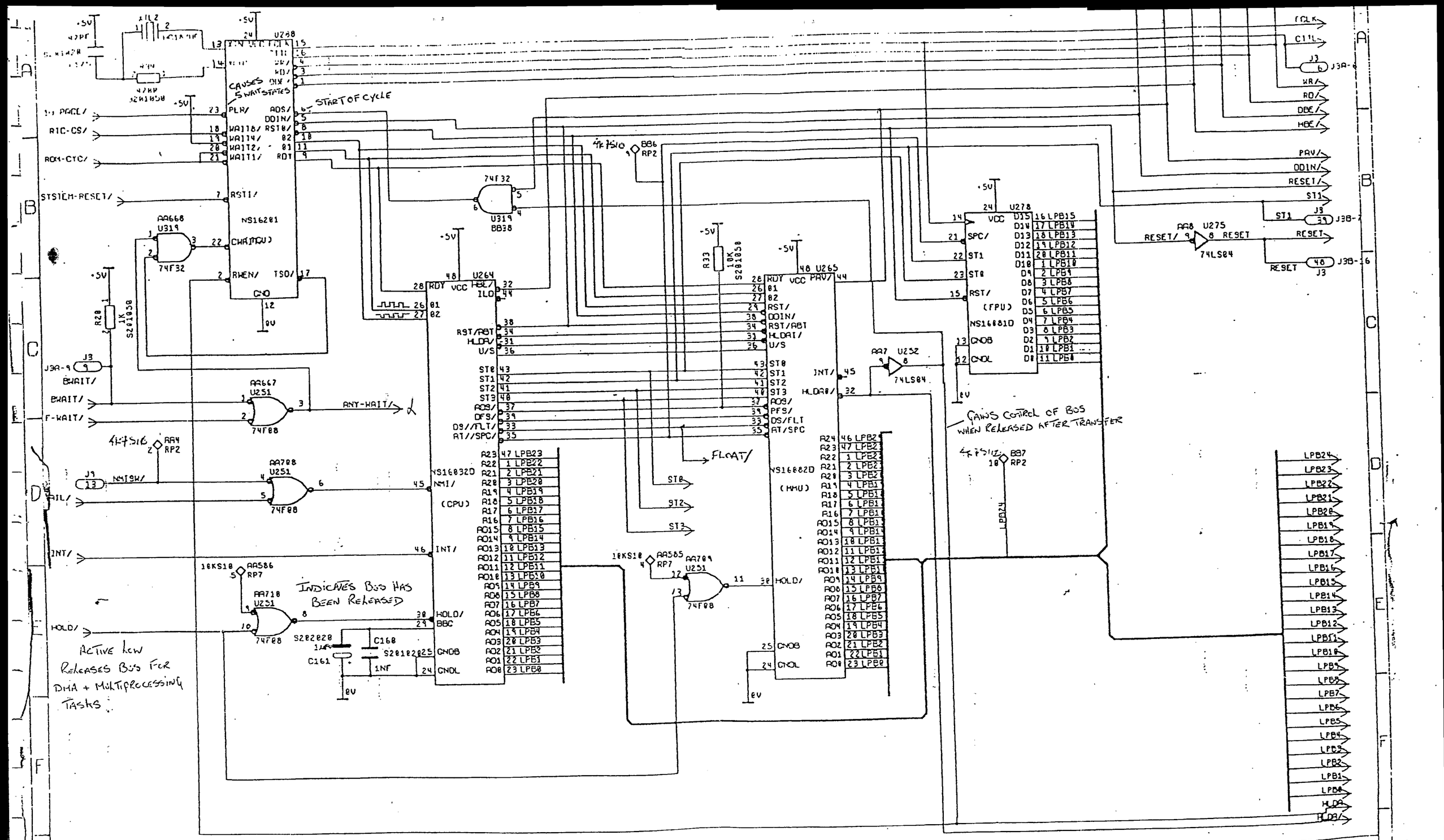
U288
NS16201
CAUSES 5 WAIT STATES
START OF CYCLE
PAGE/
RIC-CS/
ROM-CTC/
SYSTEM-RESET/
BWAIT/
F-WAIT/
NMISW/
INT/
HOLD/
ANY-WAIT/
U264
NS16032D
(CPU)
U265
NS16082D
(MMU)
U278
NS16081D
(FPU)
U275
74LS84
U252
74F08
74F32
U319
U251
U286
U287
U289
U290
U291
U292
U293
U294
U295
U296
U297
U298
U299
U300
U301
U302
U303
U304
U305
U306
U307
U308
U309
U310
U311
U312
U313
U314
U315
U316
U317
U318
U319
U320
U321
U322
U323
U324
U325
U326
U327
U328

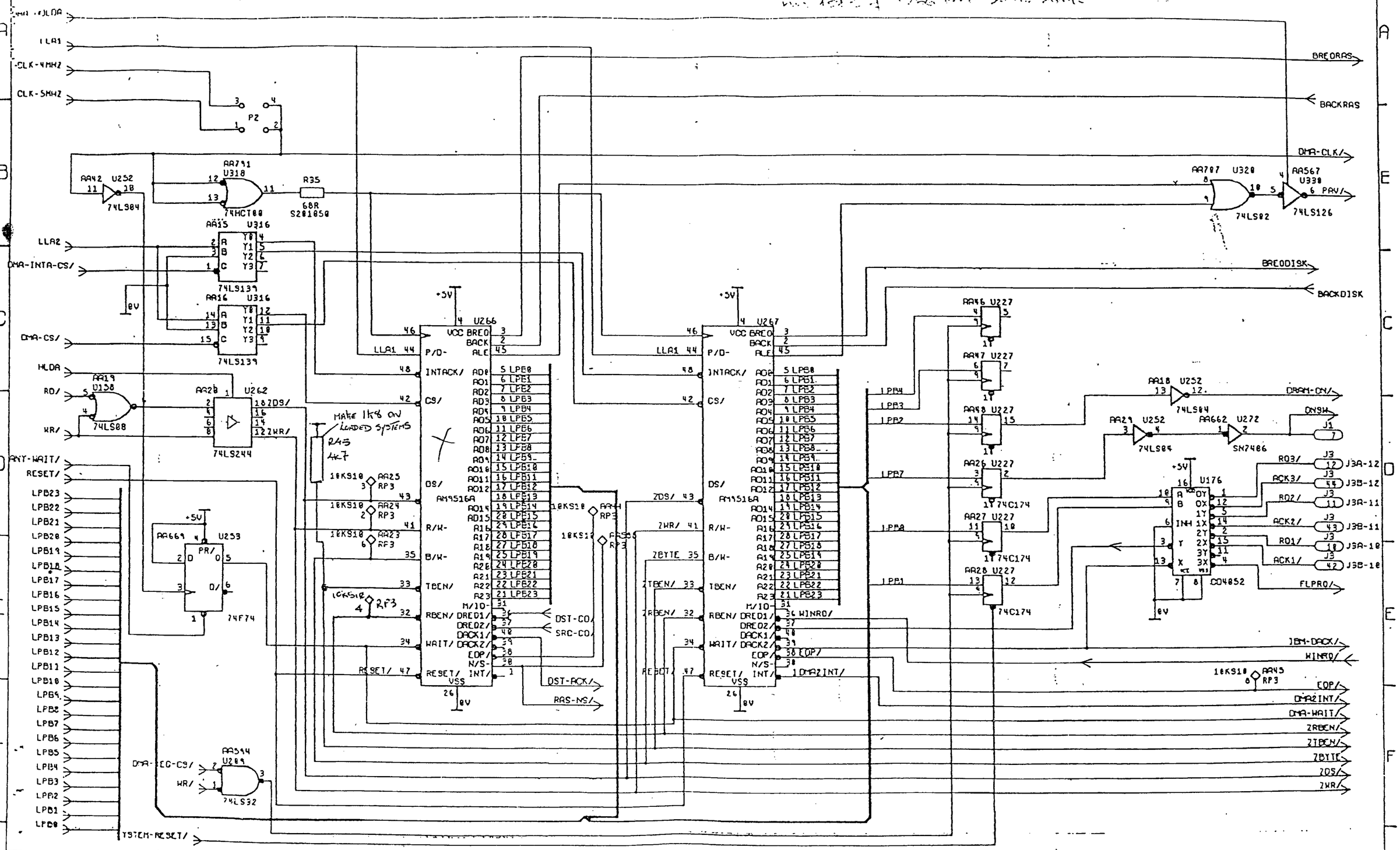

ISSUE	DESCRIPTION	APPD	DATE
3.2	CHANGES FOR ISSUE C PCB		

WHITECHAPEL
COMPUTER
WORKS

TITLE:
MILLIARD GARGANTUBRAIN
DMA CONTROLLERS

DRAWN	TRACED	CHECKED	APPROVED	DATE

DRAWING NO. W100-001-007

SHEET 2 OF 7

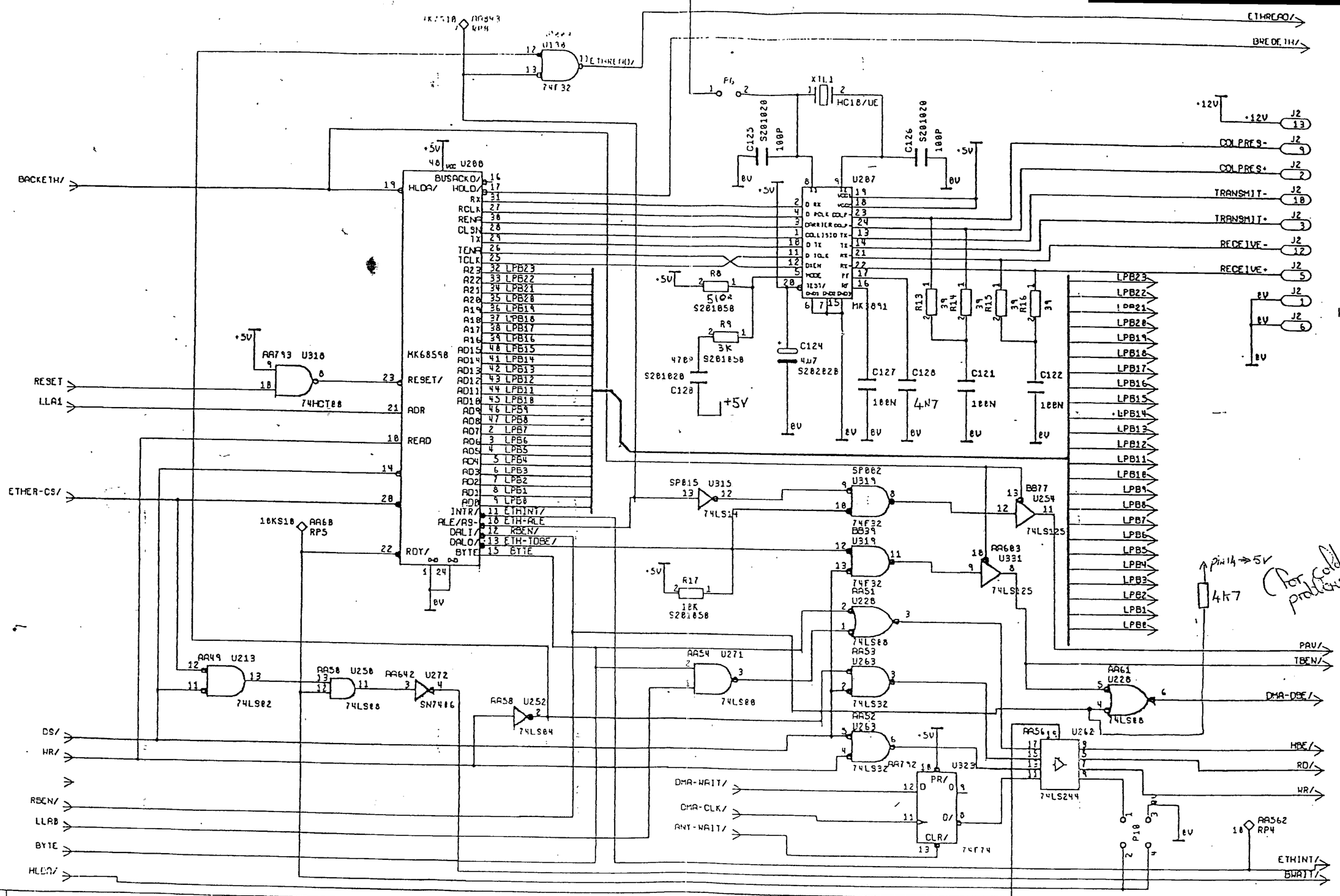

ISSUE	DESCRIPTION	APPD	DATE
3.1	CHANGES FOR ISSUE C PCB		

WHITECHAPEL
COMPUTER
WORKS

TITLE:
MILLIARD GARGANTUBRAIN
ETHERNET INTERFACE

DRAWN	TRACED	CHECKED	APPROVED	DATE
	ST			

DRAWING NO.
W100-001-007

SHEET 3 OF 20

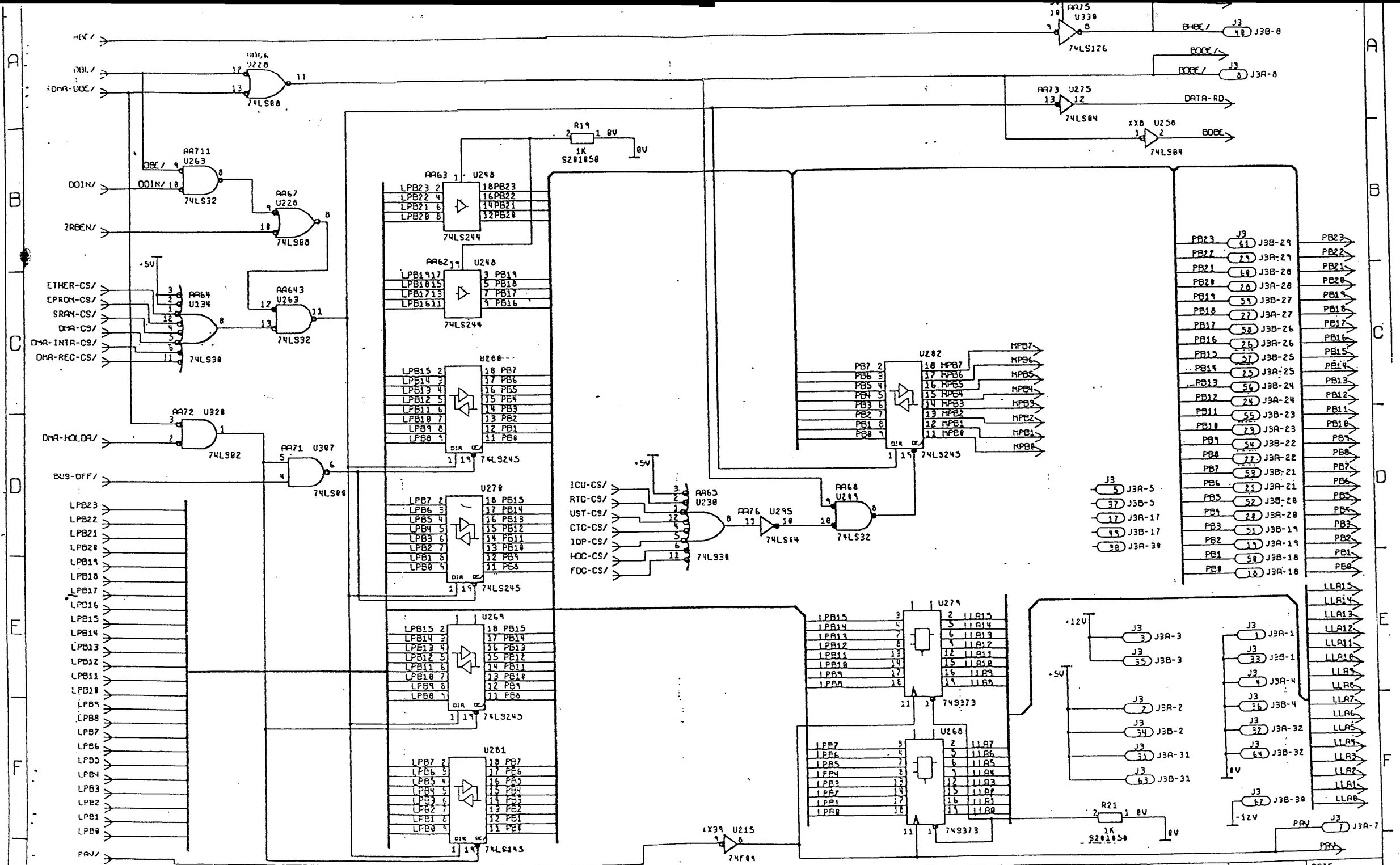

ISSUE	DESCRIPTION	APPD	DATE
3.0			

WHITECHAPEL
COMPUTER
WORKS

TITLE:
MILLIARD GARGANTUBRAIN
SYSTEM ADDRESS/DATA BUFFERING

DRAWN	TRACED	CHECKED	APPROVED	DATE

DRAWING NO. W100-001-007

SHEET 4 OF 28

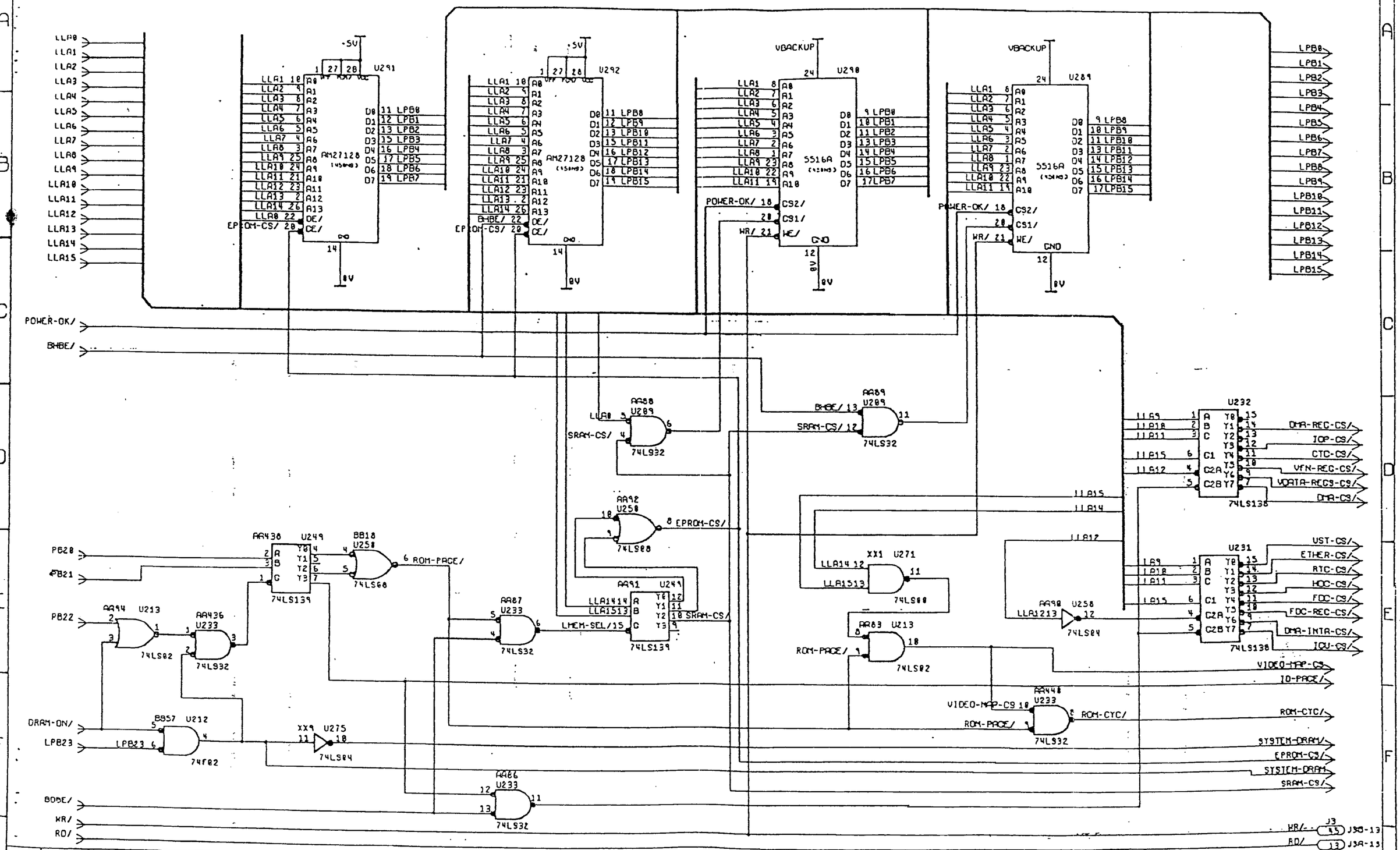

ISSUE	DESCRIPTION	APPD	DATE
3.0			

WHITECHAPEL
COMPUTER
WORKS

TITLE:
MILLIARD CARCANTUBRAIN
SYSTEM EPROM/SRAM WITH MEMORY AND I/O DECODING

DRAWN	TRACED	CHECKED	APPROVED	DATE
	ST			

DRAWING NO. W100-001-007

SHEET 3 OF 26

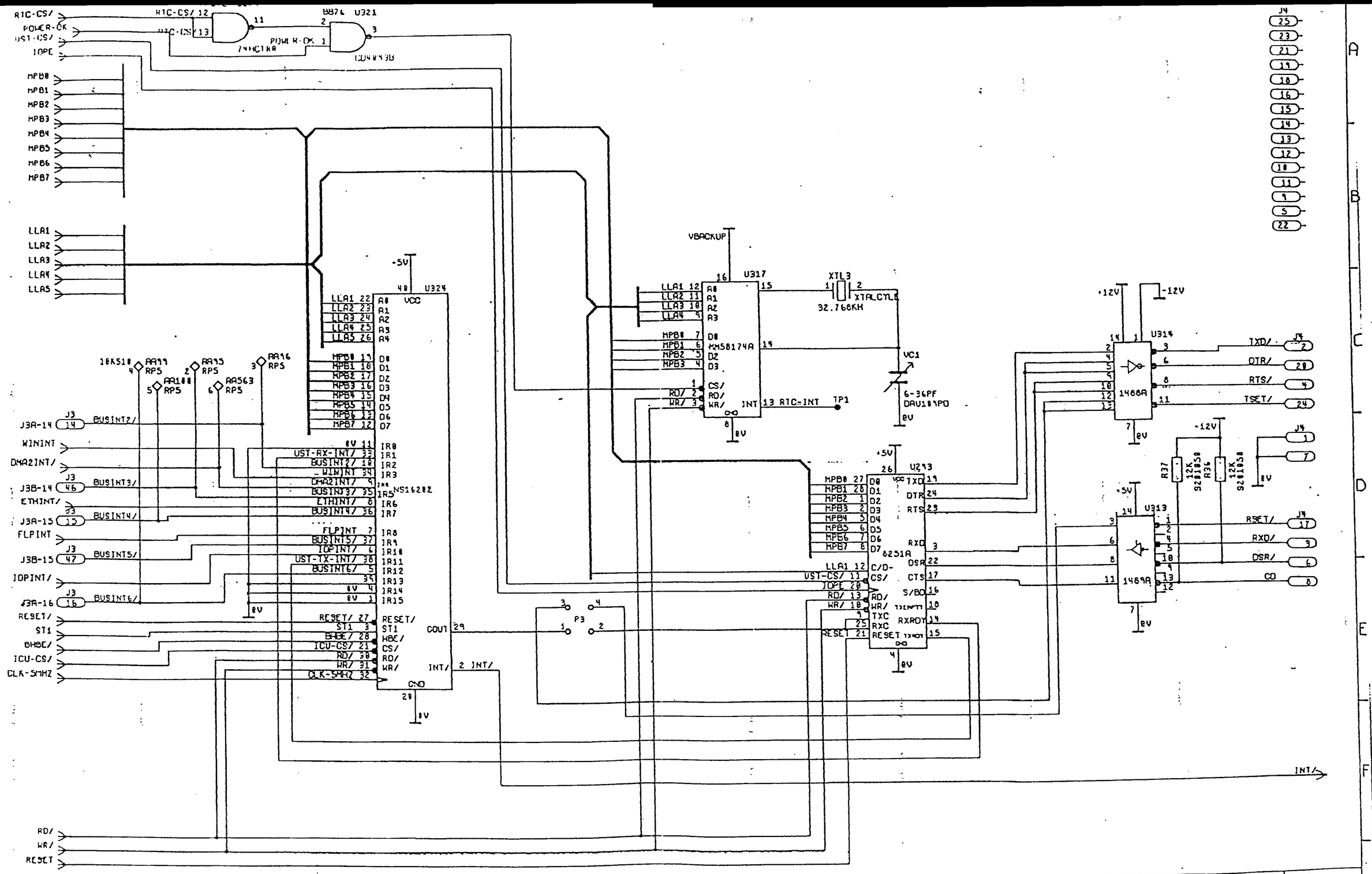

ISSUE	DESCRIPTION	APPD	DATE
3.1	CHANGES FOR ISSUE C PCB		

WHITECHAPEL COMPUTER WORKS

TITLE: MILLIARD CARCANTUBRAIN

INTERRRUPT CONTROL AND RS232 PORT AND RTC

DRAWN	TRACED	CHECKED	APPROVED	DATE

DRAWING NO. W100-001-007

SHEET 6 OF 28

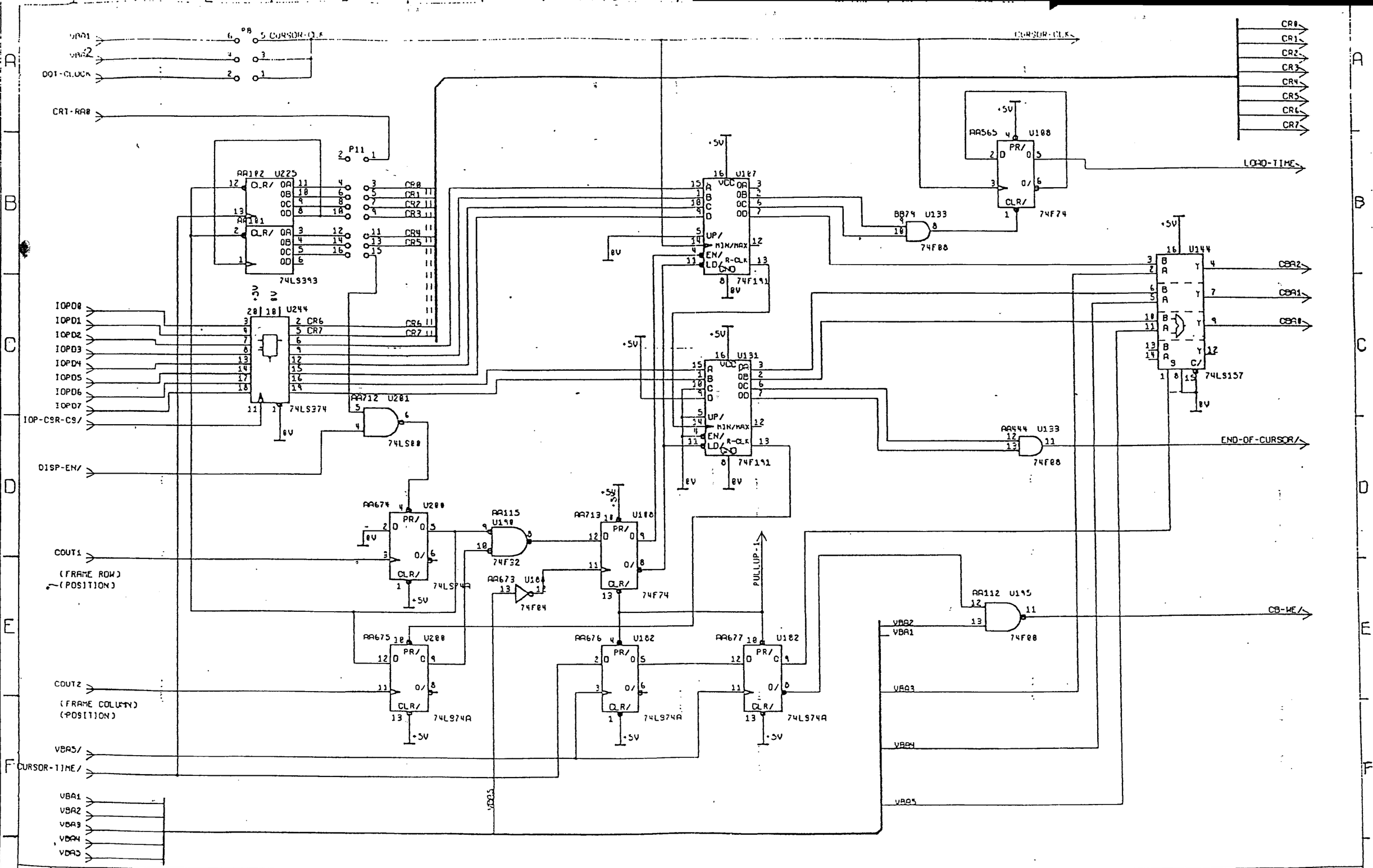

ISSUE	DESCRIPTION	APPD	DATE
3.1	CHANGES FOR ISSUE C PCB		

WHITECHAPEL
COMPUTER
WORKS

TITLE:
MILLIARD GARGANTUBRAIN
CURSOR LOGIC
(ADDRESS CONTROL)

DRAWN	TRACED	CHECKED	APPROVED	DATE

DRAWING NO. W100-001-007

SHEET 7 OF 28

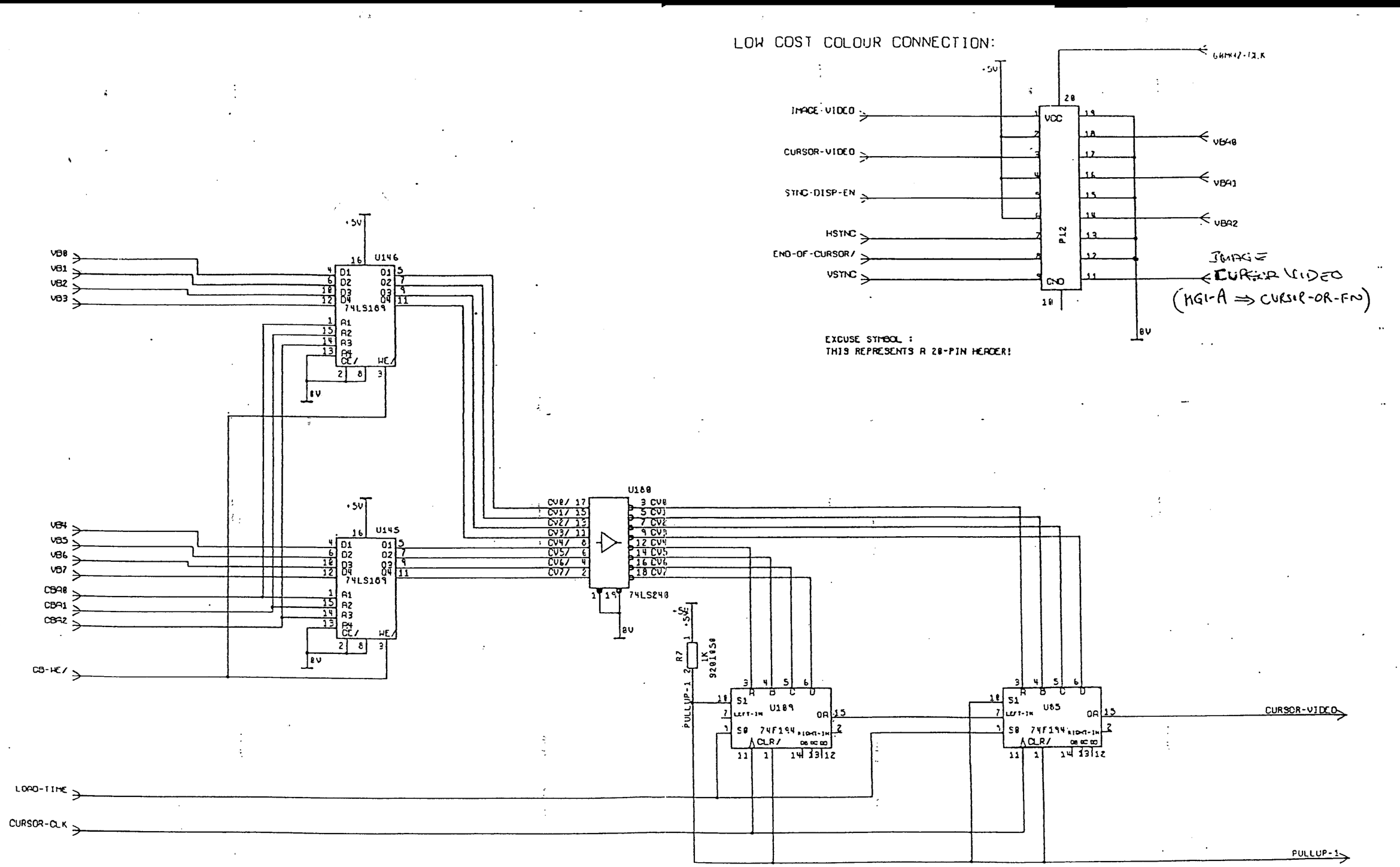

ISSUE	DESCRIPTION	APPD	DATE
3.1	CHANGES FOR ISSUE C PCB		

WHITECHAPEL COMPUTER WORKS

TITLE: MILLIARD GARGANTUBRAIN
CURSOR LOGIC (BUFFERING AND SHIFTING)

DRAWN	TRACED	CHECKED	APPROVED	DATE

DRAWING NO. W100-001-007

SHEET 8 OF 28

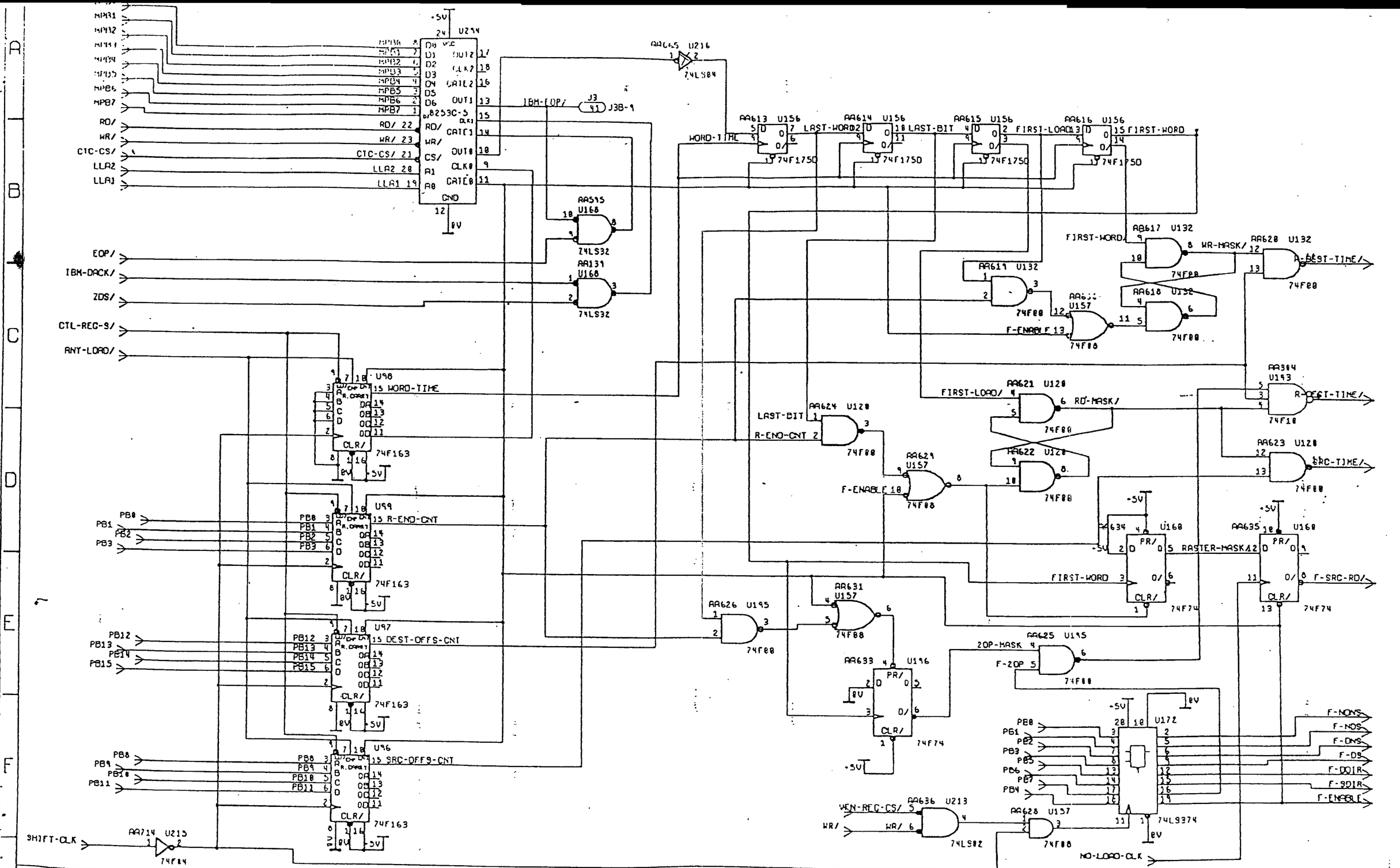

ISSUE	DESCRIPTION	APPD	DATE
3.0			

WHITECHAPEL
COMPUTER
WORKS

TITLE:
MILLIARD GARGANTUBRAIN
VIDEO PROCESSOR
(WORD AND PIXEL COUNTS)

DRAWN	TRACED	CHECKED	APPROVED	DATE
	ST			

DRAWING NO. W100-001-007

SHEET 9 OF 28

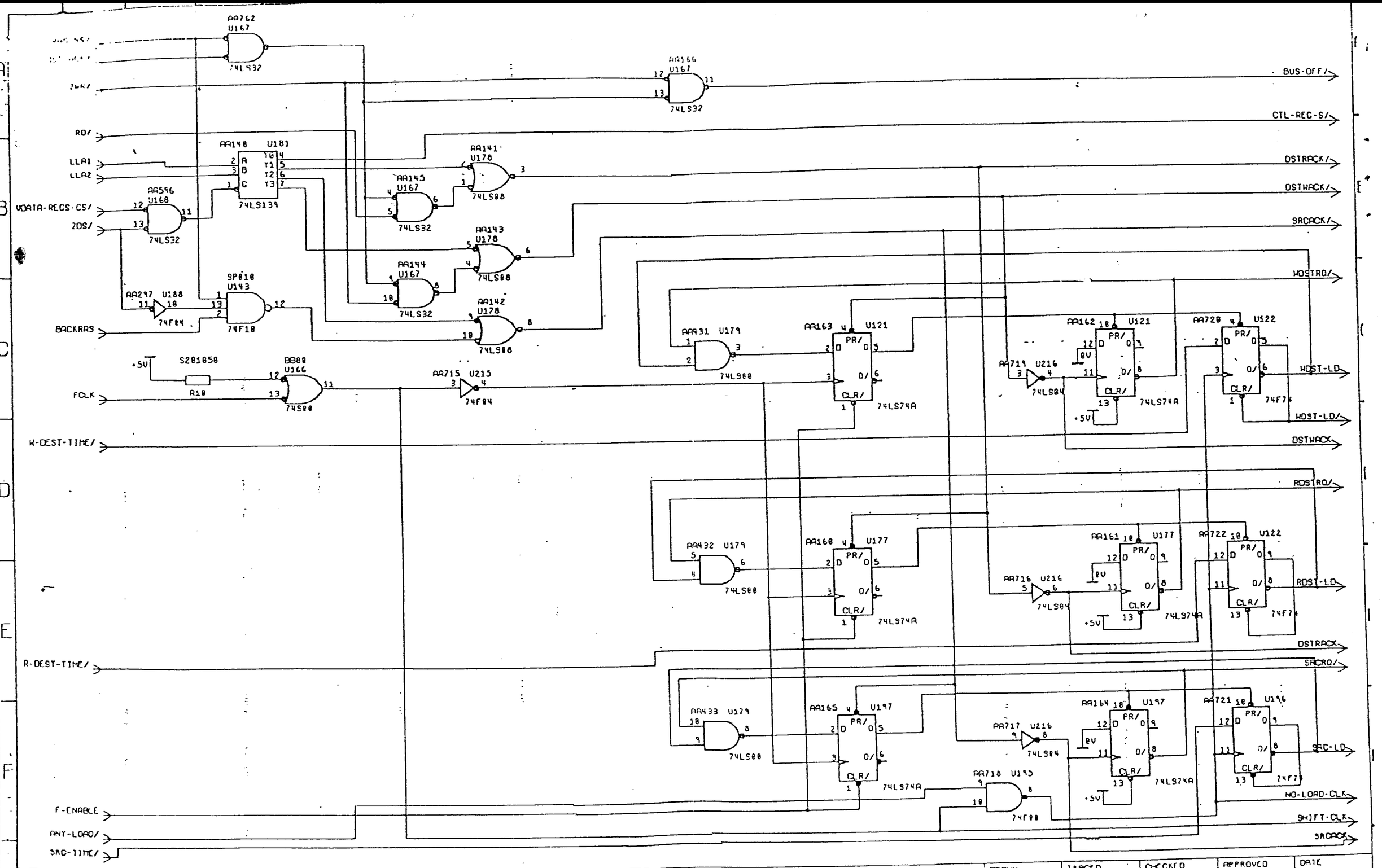

ISSUE	DESCRIPTION	APPD	DATE
3.0			

WHITECHAPEL
COMPUTER
WORKS

TITLE:
MILLIARD CARCANTUBRAIN
VIDEO PROCESSOR
(LOAD TIMING)

DRAWN	TRACED	CHECKED	APPROVED	DATE

DRAWING NO. W100-001-007

SHEET 10 OF 28

* NOTE: THE FOLLOWING CHIPS ARE UPGRADED TO F SERIES
74LS299; ALL ARE NOW 74F299
74LS02
74LS32
PS: 74F27 DEVICE DOES NOT EXIST, USE 74LS27!

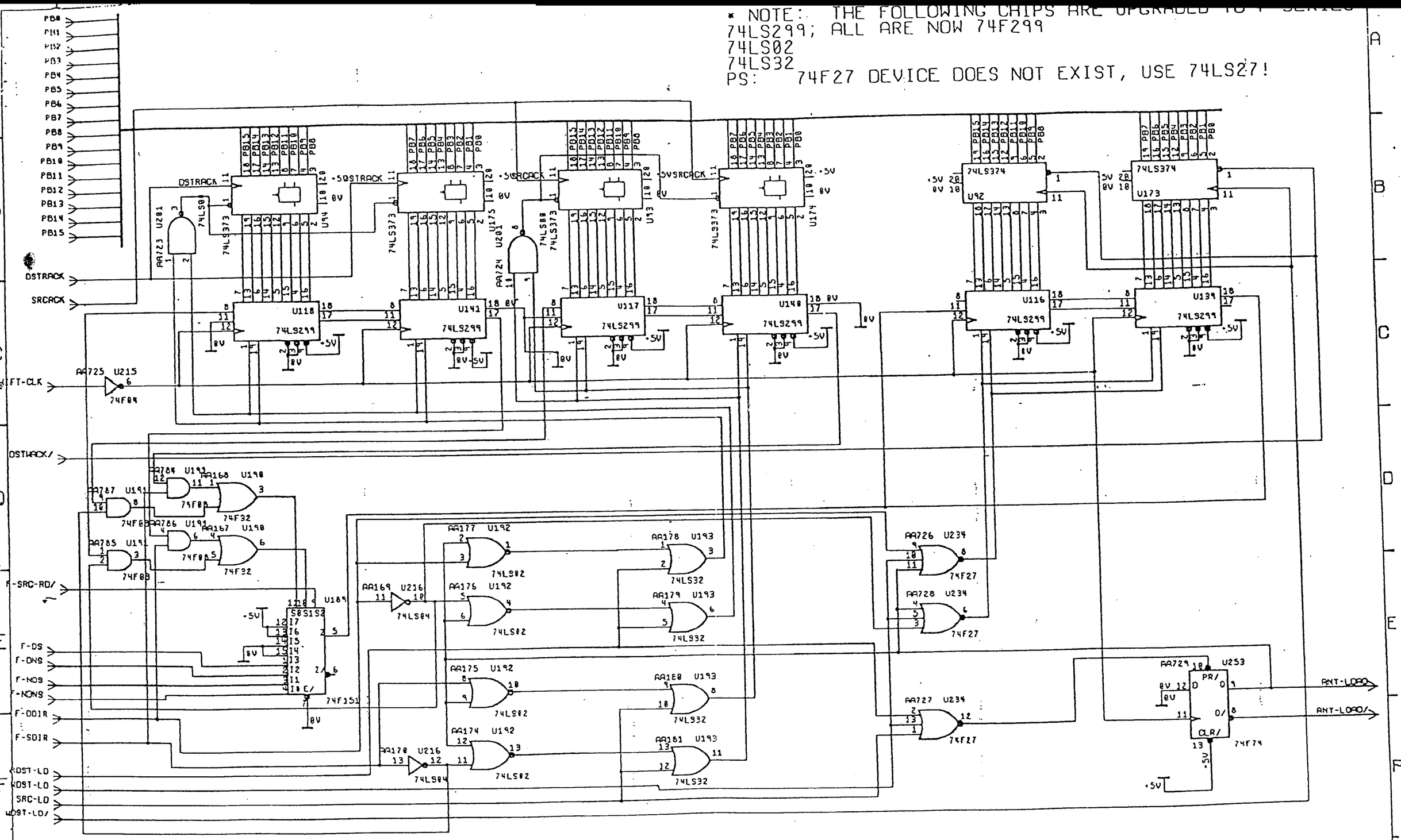

ISSUE	DESCRIPTION	APPD	DATE
3.0			

WHITECHAPEL
COMPUTER
WORKS

TITLE:
MILLIARD GARGANTUBRAIN
VIDEO PROCESSOR
(SIGNAL PATHS)

DRAWN	TRACED	CHECKED	APPROVED	DATE

DRAWING NO. W100-001-007

SHEET 11 OF 28

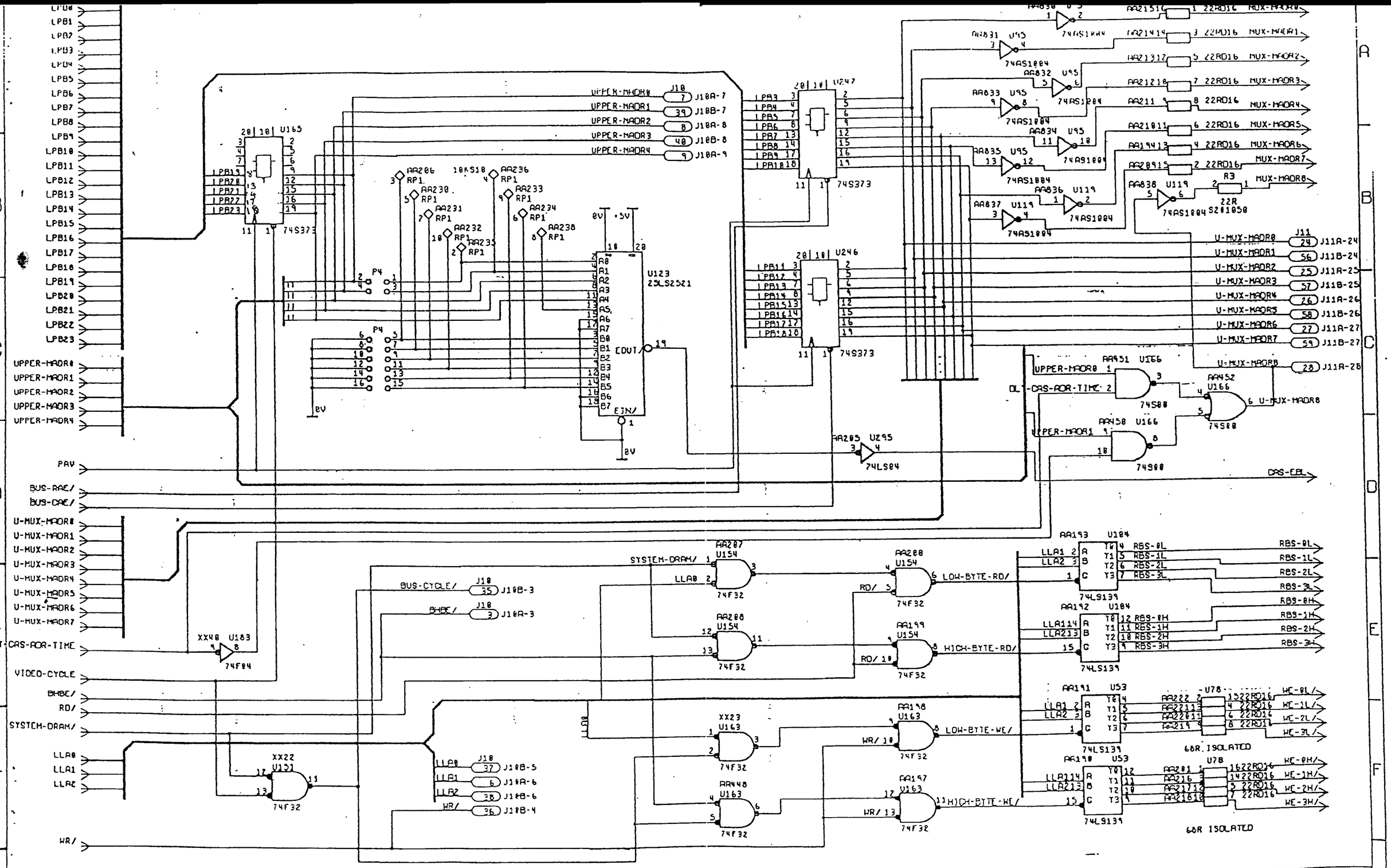

ISSUE	DESCRIPTION	APPD	DATE
3.1	CHANGES FOR ISSUE C PCB		

WHITECHAPEL
COMPUTER
WORKS

TITLE:
MILLIARD CARCANTUBRAIN
MEMORY ADDRESSING

DRAWN	TRACED	CHECKED	APPROVED	DATE
	ST			

DRAWING NO. W100-001-007

SHEET 12 OF 28

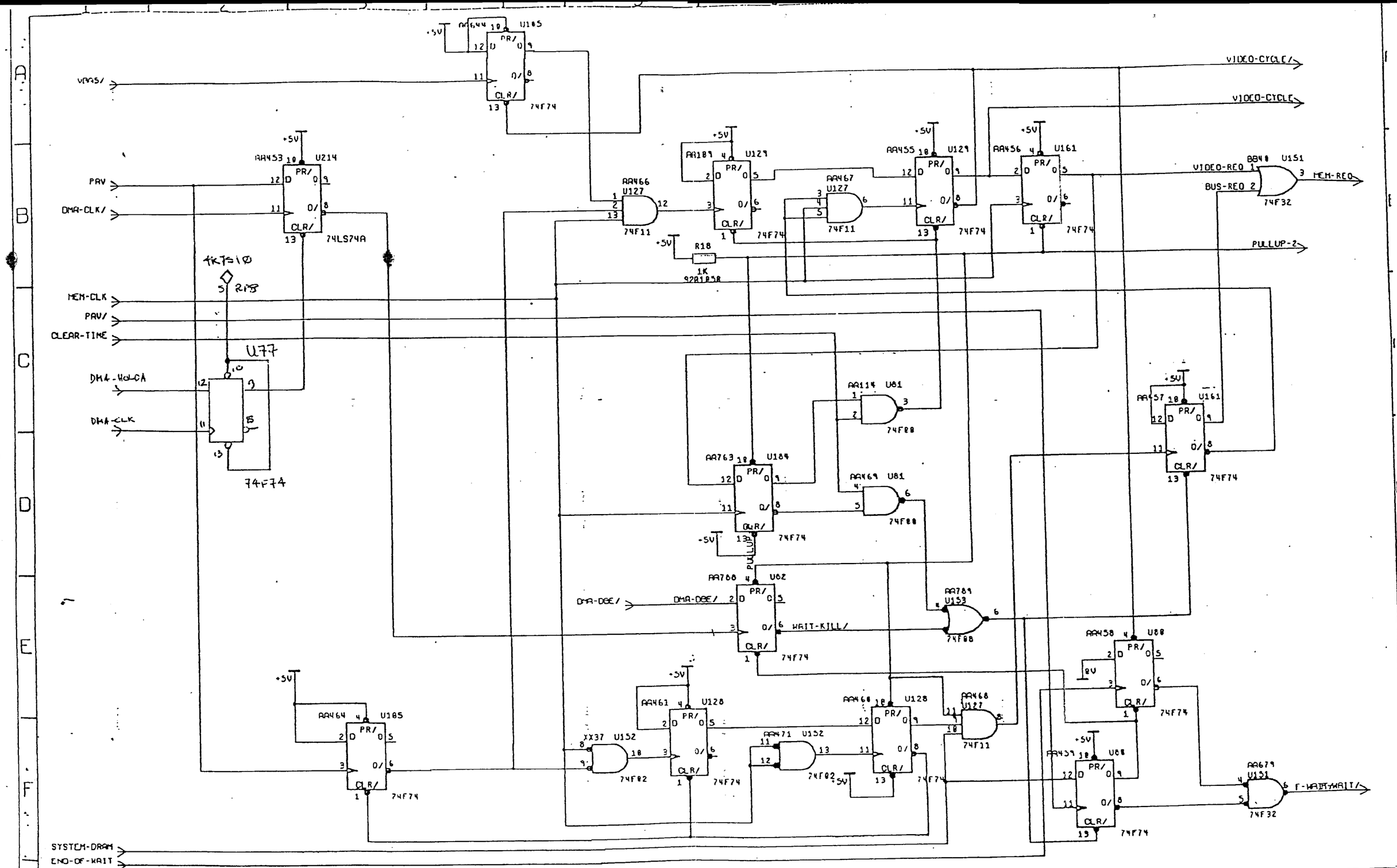

ISSUE	DESCRIPTION	APPD	DATE
3.1	CHANGES FOR ISSUE C PCB		

WHITECHAPEL
COMPUTER
WORKS

TITLE:
MILLIARD CARCANTUBRAIN

DRAWN	TRACED	CHECKED	APPROVED	DATE

DRAWING NO. W100-001-007

SHEET 13 OF 28

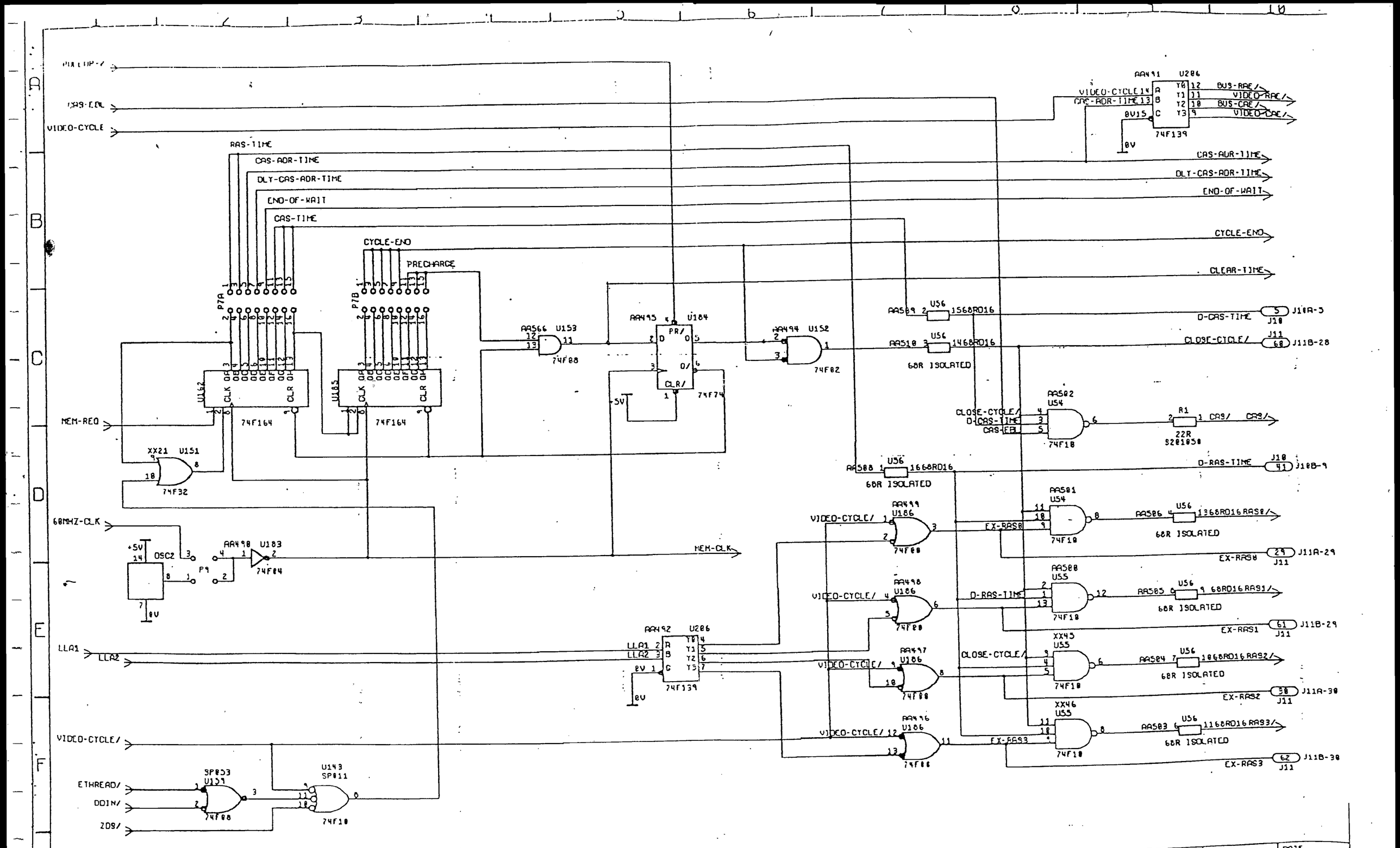

ISSUE	DESCRIPTION	APPD	DATE
3.1	CHANGES FOR ISSUE C PCB		

WHITECHAPEL COMPUTER WORKS

TITLE:

MILLIARD CARCANTUBRAIN

MEMORY REQUEST CONTROL

MEMORY TIMING CONTROL

DRAWN	TRACED	CHECKED	APPROVED	DATE
	ST			

DRAWING NO. W100-001-007

SHEET 14 OF 28

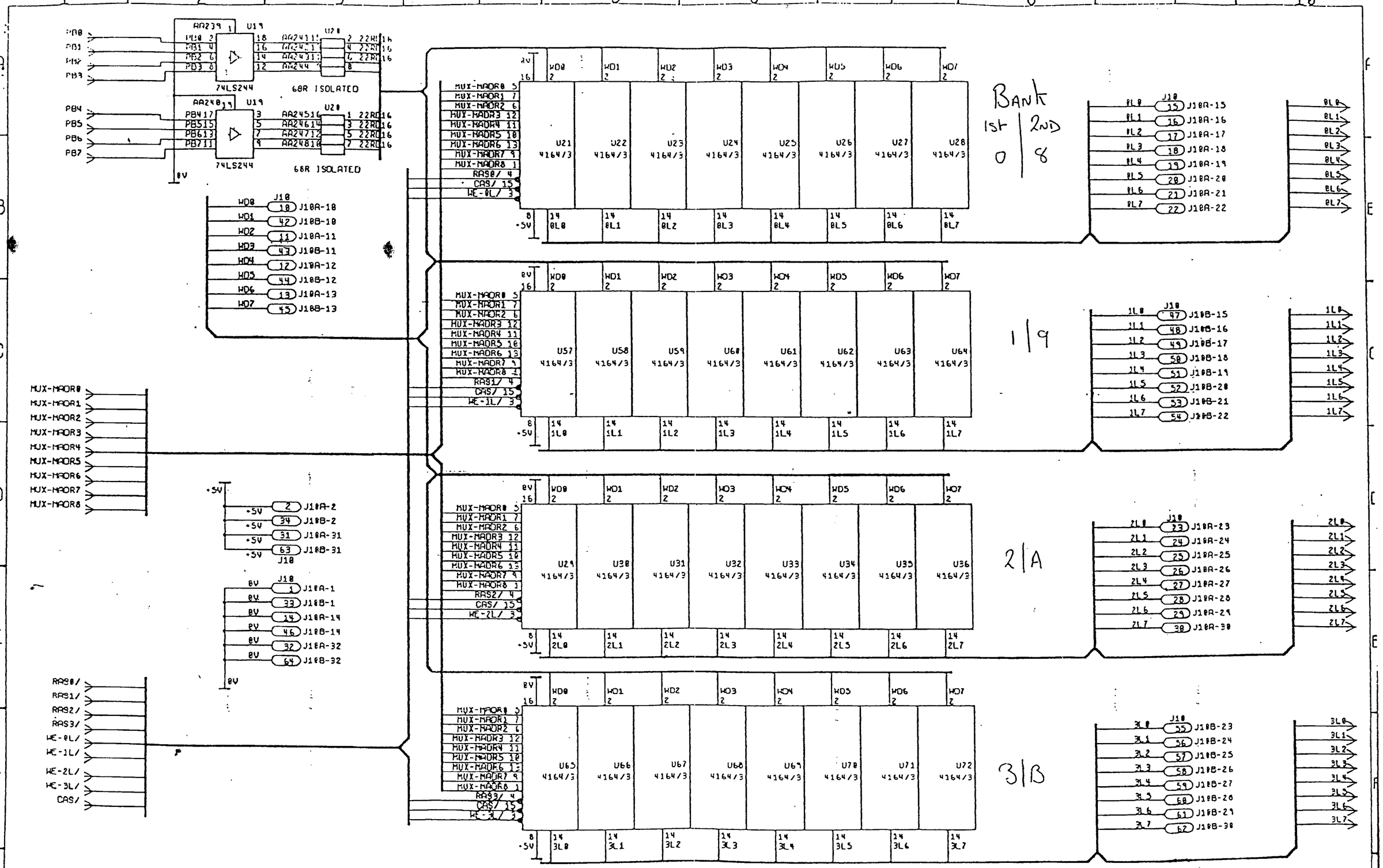

ISSUE	DESCRIPTION	APPD	DATE
3.0			

WHITECHAPEL COMPUTER WORKS

TITLE: MILLIARD CARCANTUBRAIN

LOW BYTE MEMORY BANKS

DRAWN	TRACED	CHECKED	APPROVED	DATE
	ST	...		

DRAWING NO. W100-001-007

SHEET 15 OF 28

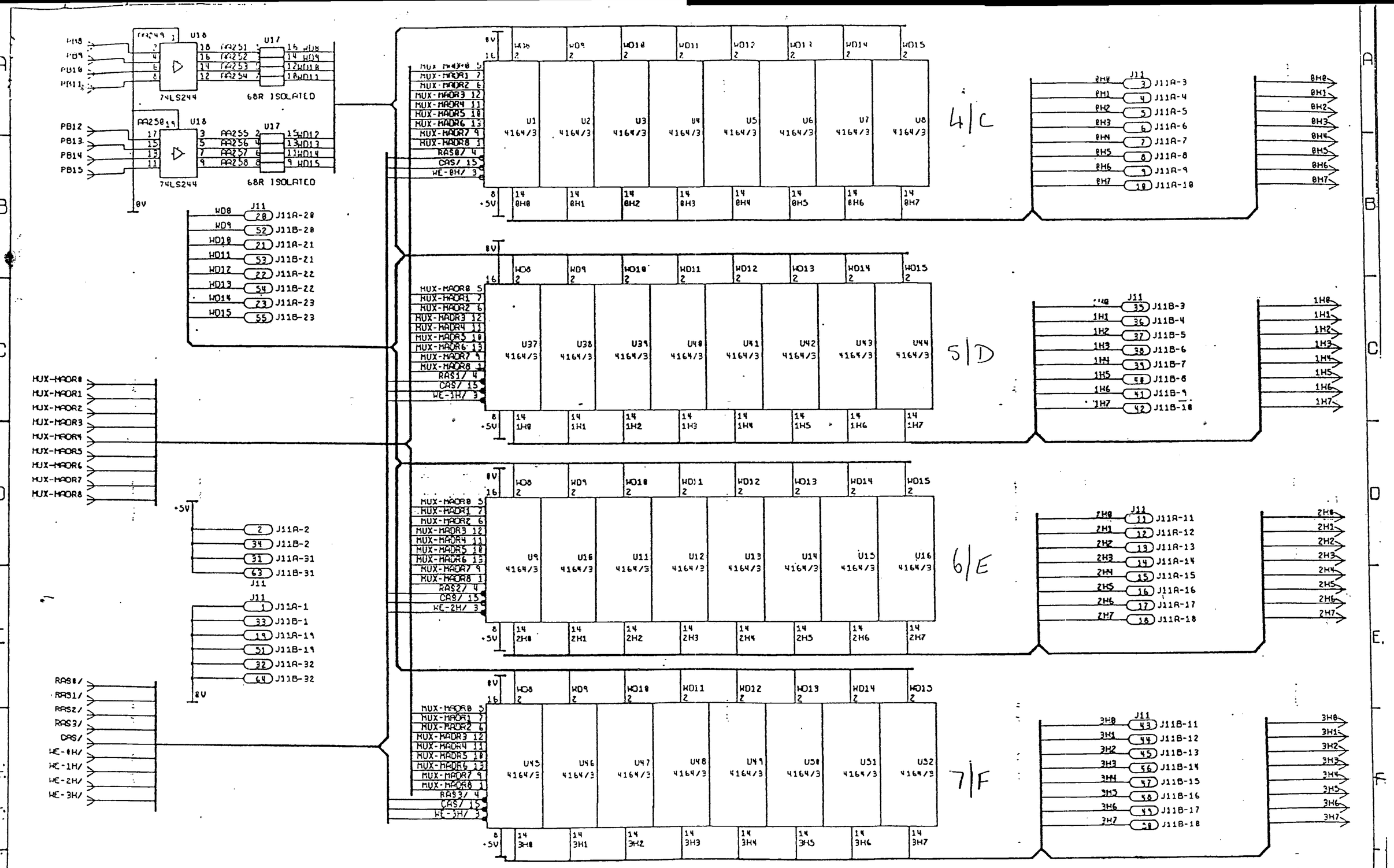

ISSUE	DESCRIPTION	APPD	DATE
3.0			

WHITECHAPEL
COMPUTER
WORKS

TITLE:
MILLIARD GARGANTUBRAIN
HIGH BYTE MEMORY BANKS

DRAWN	TRACED	CHECKED	APPROVED	DATE

DRAWING NO. W100-001-007

SHEET 16 OF 28

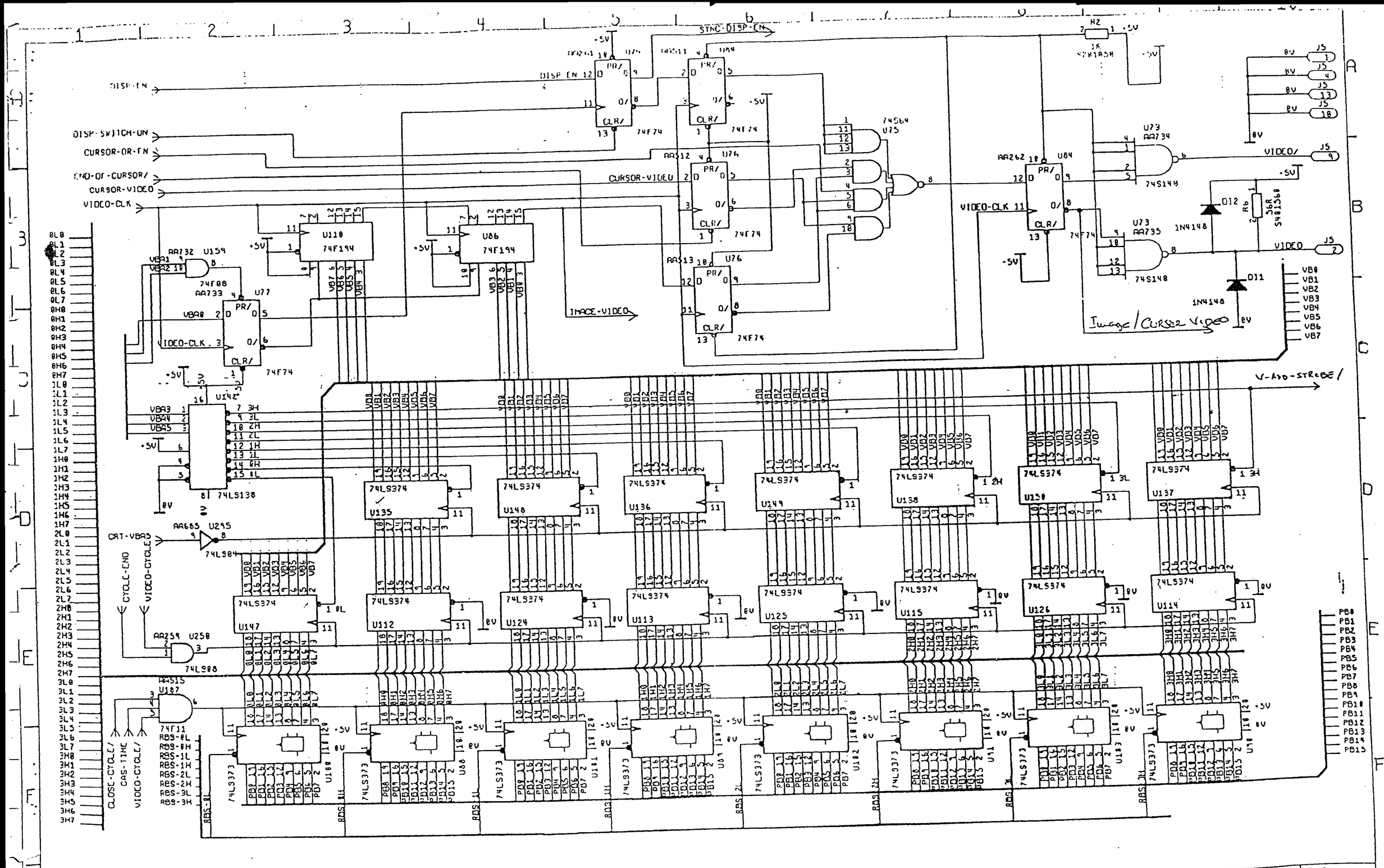

ISSUE	DESCRIPTION	APPD	DATE
3.1	CHANGES FOR ISSUE C PCB		

WHITECHAPEL
COMPUTER
WORKS

TITLE:
MILLIARD CARCANTUBRAIN
MEMORY BUFFERING

DRAWN	TRACED	CHECKED	APPROVED	DATE

DRAWING NO. W100-001-007

SHEET 17 OF 28

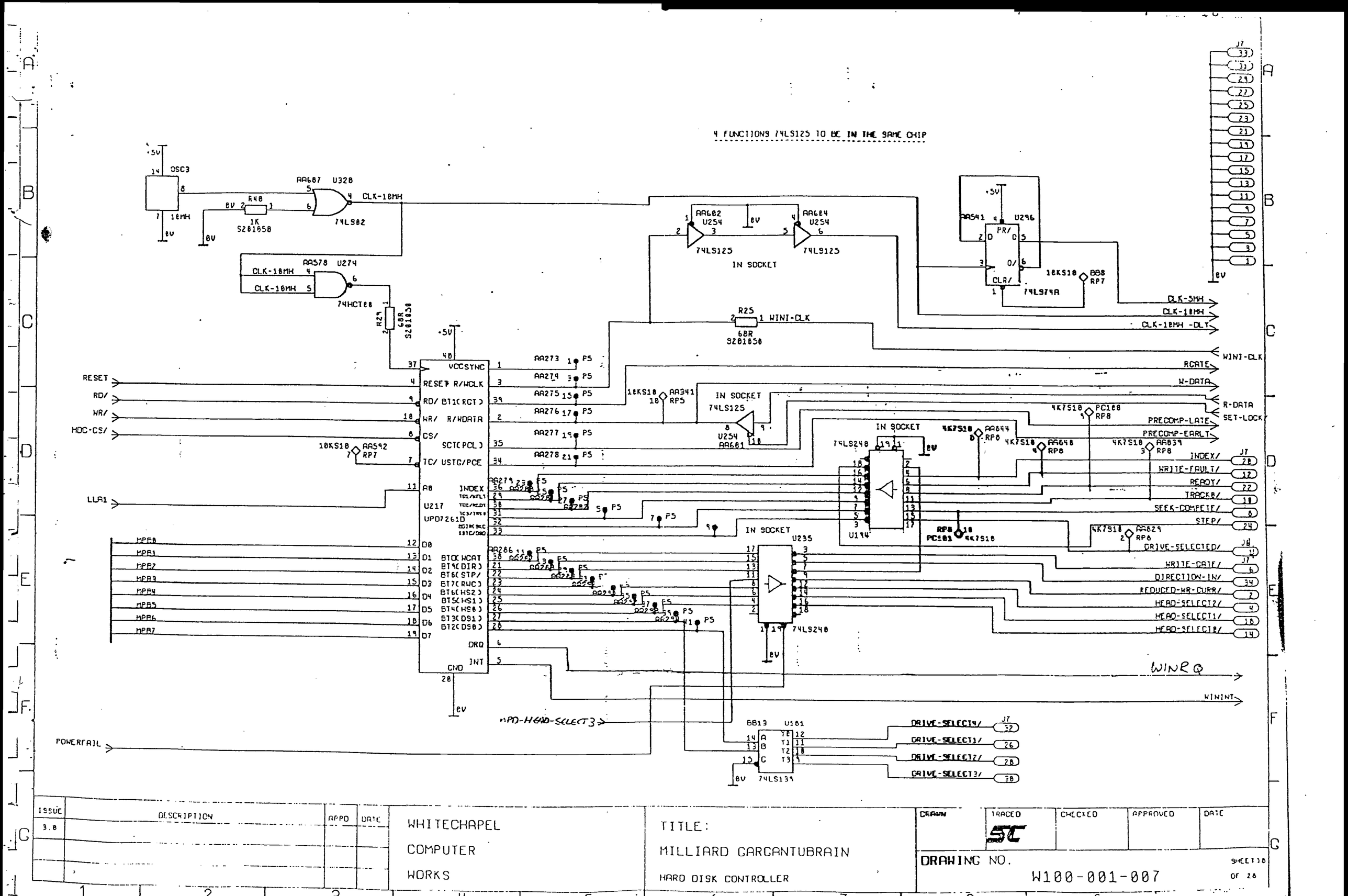

ISSUE	DESCRIPTION	APPD	DATE
3.0			

WHITECHAPEL COMPUTER WORKS

TITLE: MILLIARD GARGANTUBRAIN

HARD DISK CONTROLLER

DRAWN	TRACED	CHECKED	APPROVED	DATE
	SC			

DRAWING NO. W100-001-007

SHEET 10 OF 28

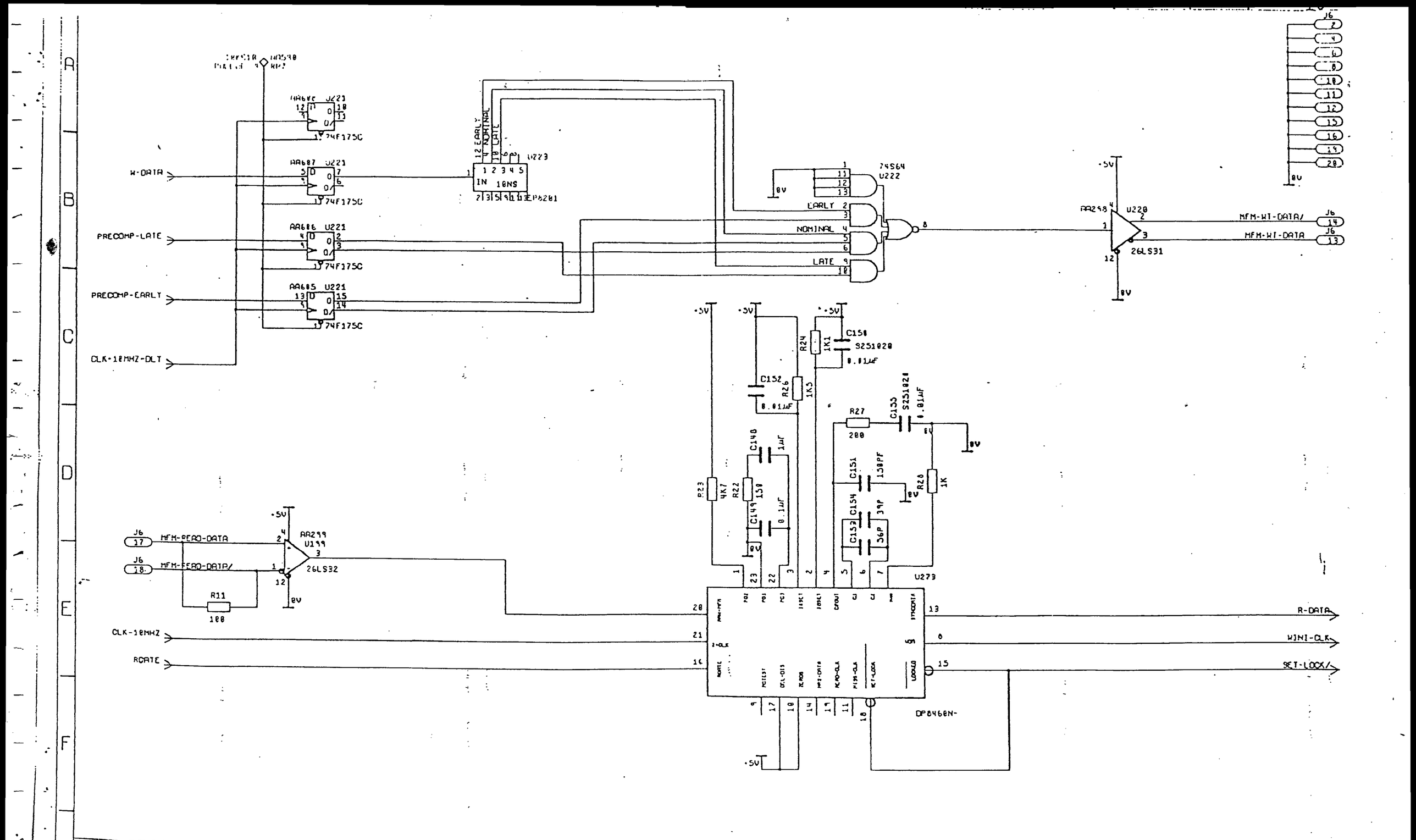

ISSUE	DESCRIPTION	APPD	DATE
3.0			

WHITECHAPEL COMPUTER WORKS

TITLE: MILLIARD GARGANTUBRAIN

HARD DISK DATA HANDLING

DRAWN	TRACED	CHECKED	APPROVED	DATE

DRAWING NO. W100-001-007

SHEET 19 OF 26

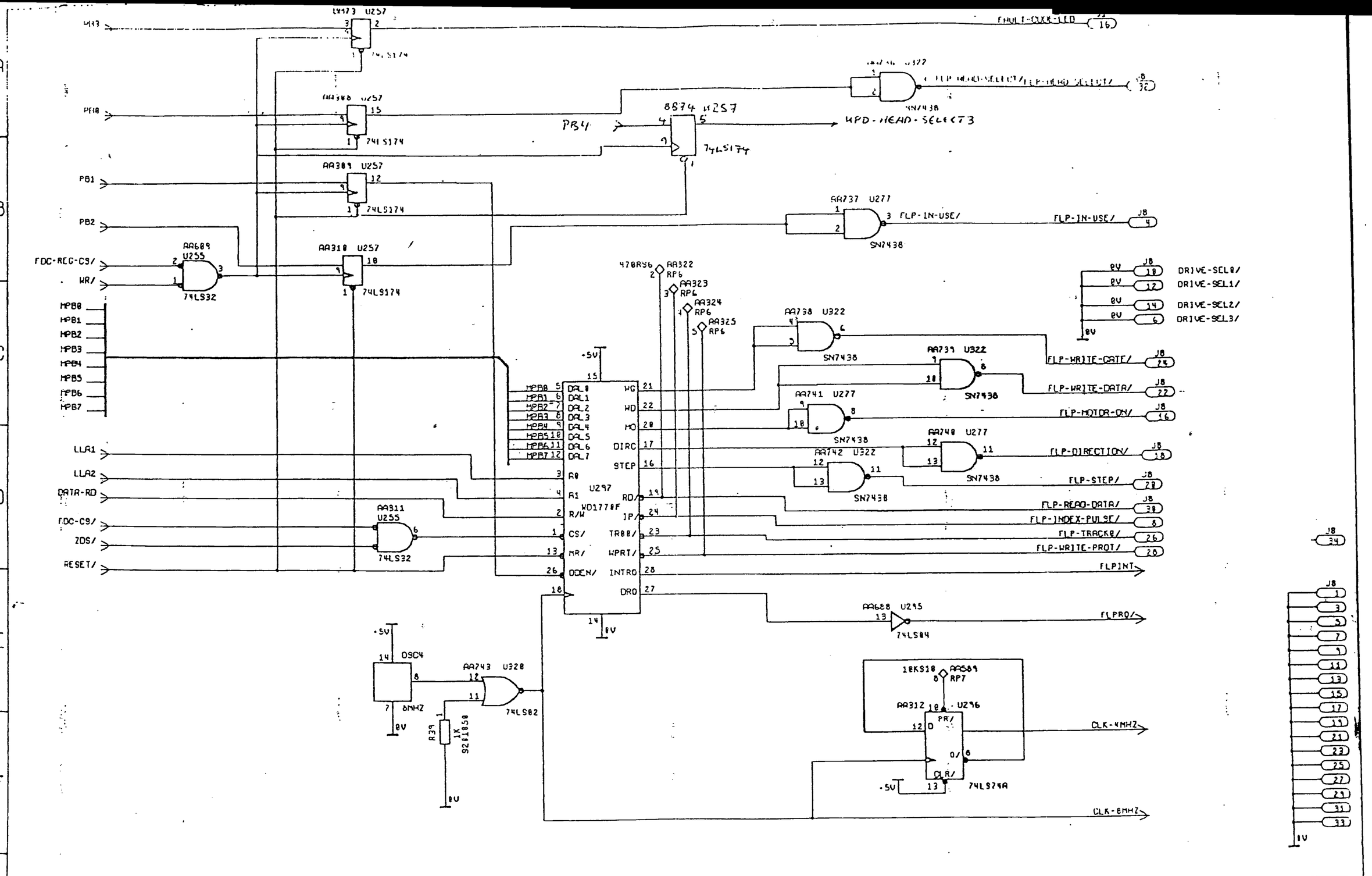

ISSUE	DESCRIPTION	APPD	DATE
3.0			

WHITECHAPEL
COMPUTER
WORKS

TITLE:
MILLIARD CARCANTUBRAIN
FLOPPY DISK CONTROLLER

DRAWN	TRACED	CHECKED	APPROVED	DATE

DRAWING NO. W100-001-007

SHEET 1 OF 2

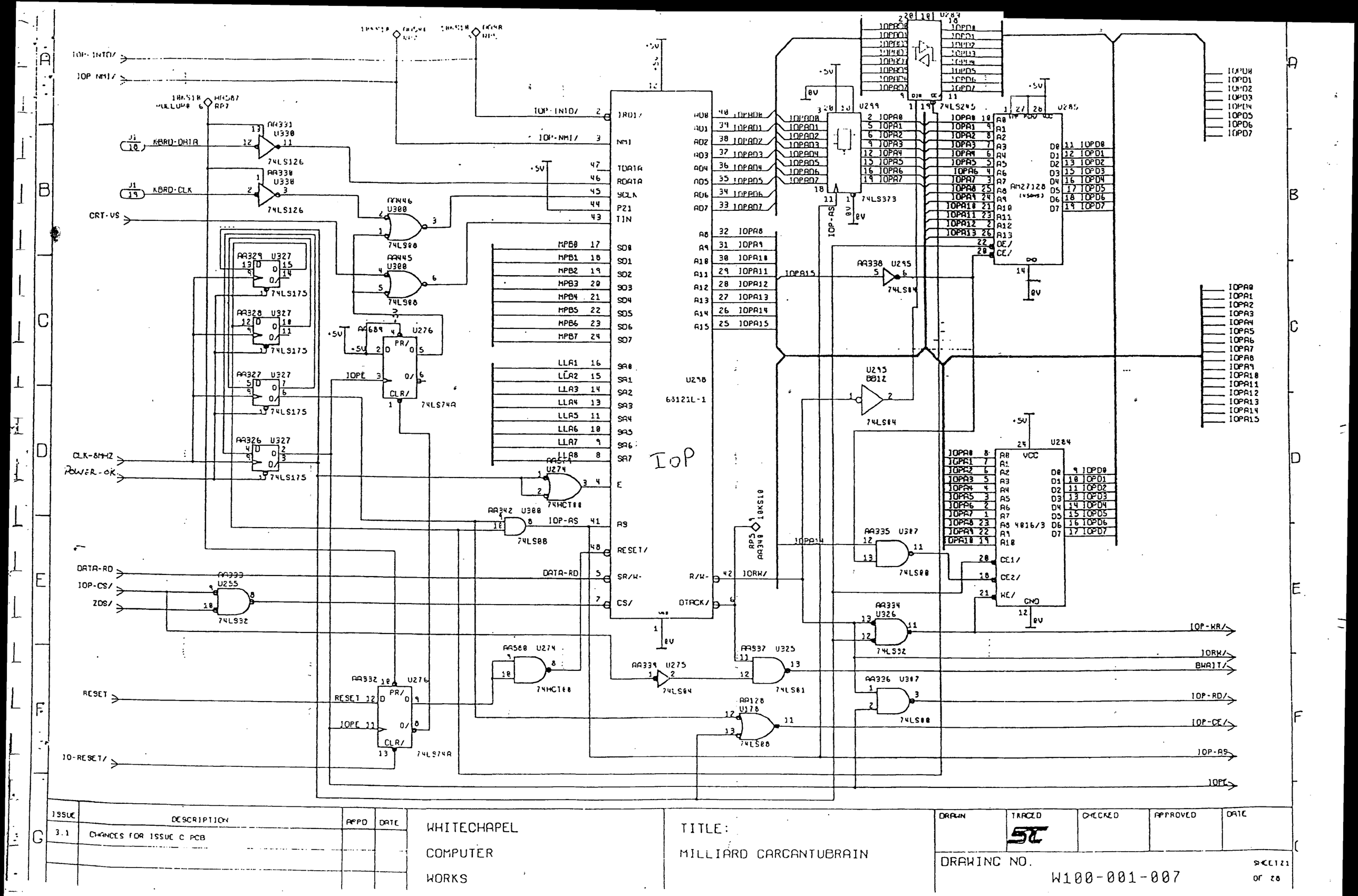

ISSUE	DESCRIPTION	APPD	DATE
3.1	CHANGES FOR ISSUE C PCB		

WHITECHAPEL
COMPUTER
WORKS

TITLE:
MILLIARD CARCANTUBRAIN

DRAWN	TRACED	CHECKED	APPROVED	DATE
	ST			

DRAWING NO.
W100-001-007

SHEET 21
OF 28

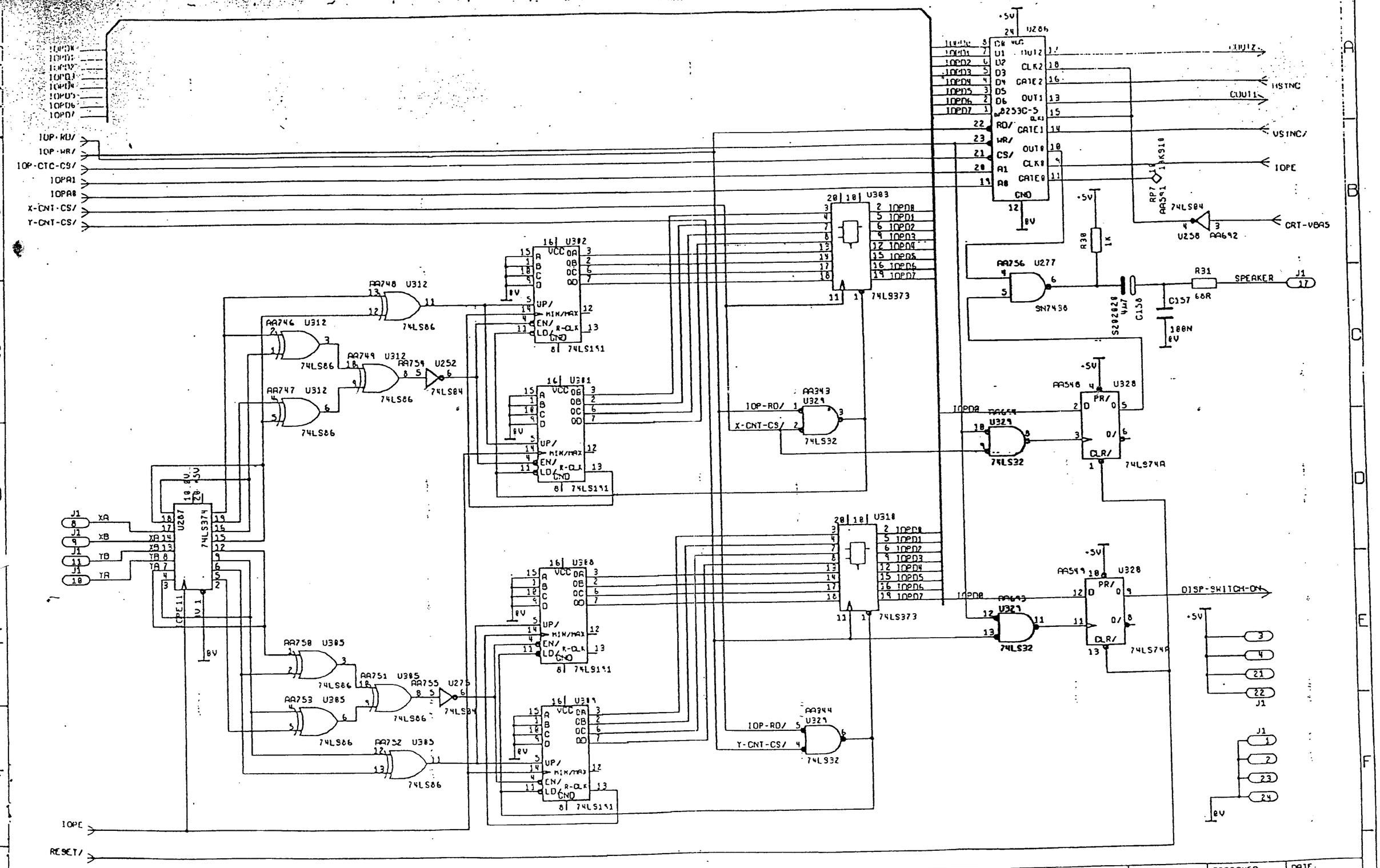

ISSUE	DESCRIPTION	APPD	DATE
3.1	CHANGES FOR ISSUE C PCB		

WHITECHAPEL
COMPUTER
WORKS

TITLE:
MILLIARD CARCANTUBRAIN
IO PROCESSOR - COUNTER
- MOUSE INTERFACE

DRAWN	TRACED	CHECKED	APPROVED	DATE
	ST			

DRAWING NO. W100-001-007

SHEET 22 OF 28

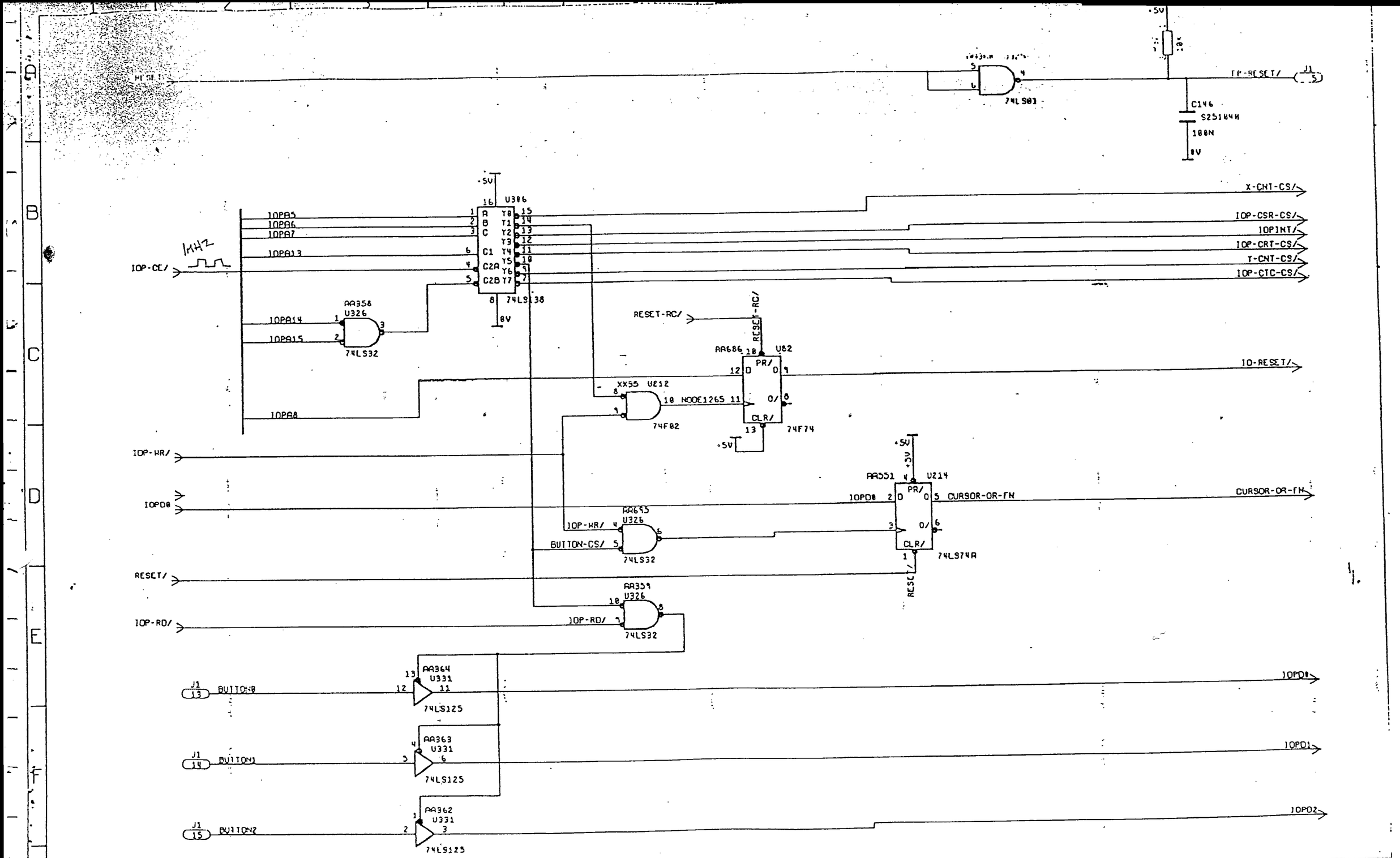

ISSUE	DESCRIPTION	APPD	DATE
3.8			

WHITECHAPEL
COMPUTER
WORKS

TITLE:
MILLIARD GARGANTUBRAIN
IO PROCESSOR - IO DECODE
- BUTTONS INTERFACE

DRAWN	TRACED	CHECKED	APPROVED	DATE
	ST			

DRAWING NO. W100-001-007

SHEET 23 OF 28

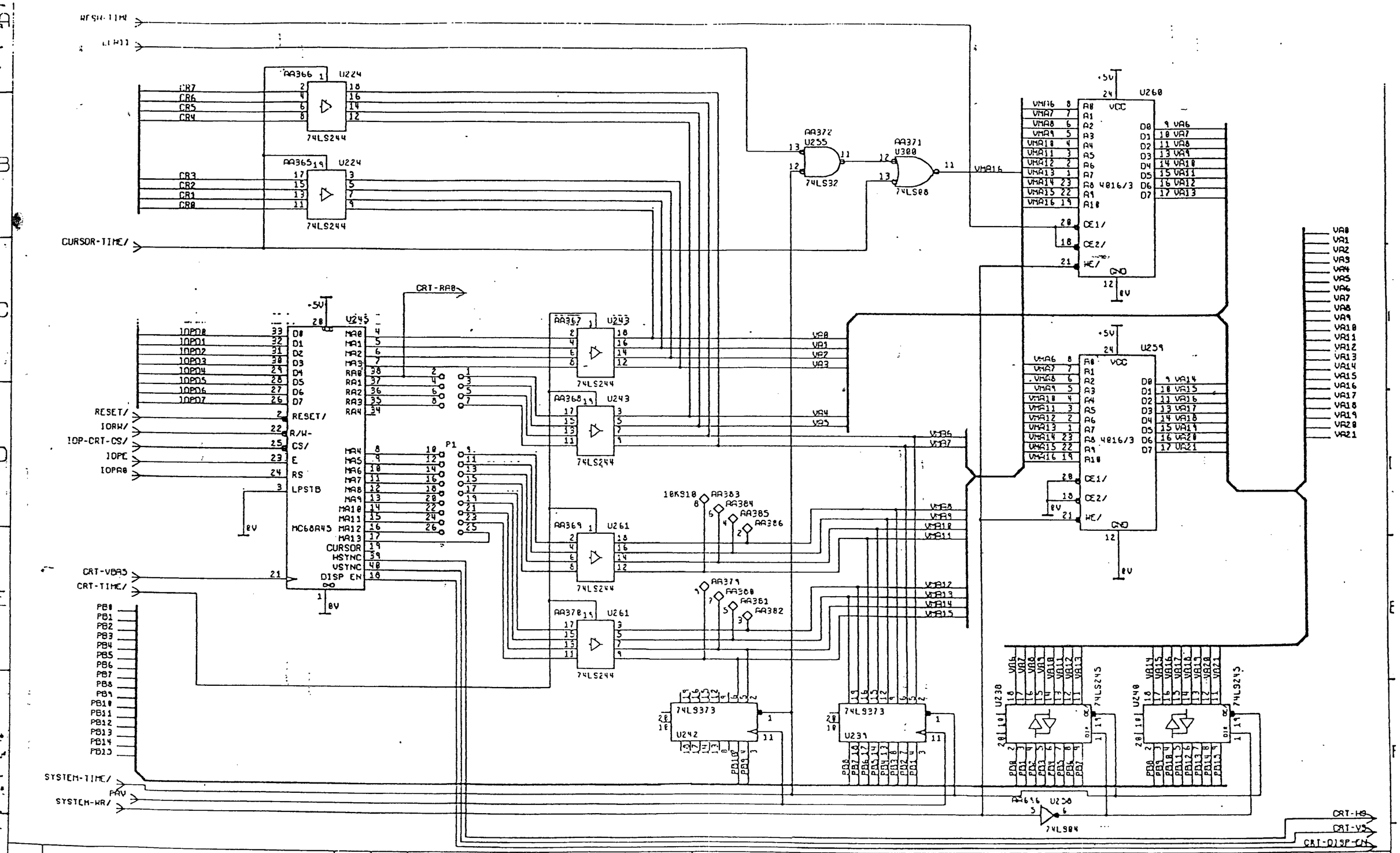

ISSUE	DESCRIPTION	APPD	DATE
3.1	CHANGES FOR ISSUE C PCB		

WHITECHAPEL
COMPUTER
WORKS

TITLE:
MILLIARD GARGANTUBRAIN
CRT CONTROLLER WITH
VIDEO ADDRESS MAP

DRAWN	TRACED	CHECKED	APPROVED	DATE

DRAWING NO.
W100-001-007

SHEET 2A
OF 2A

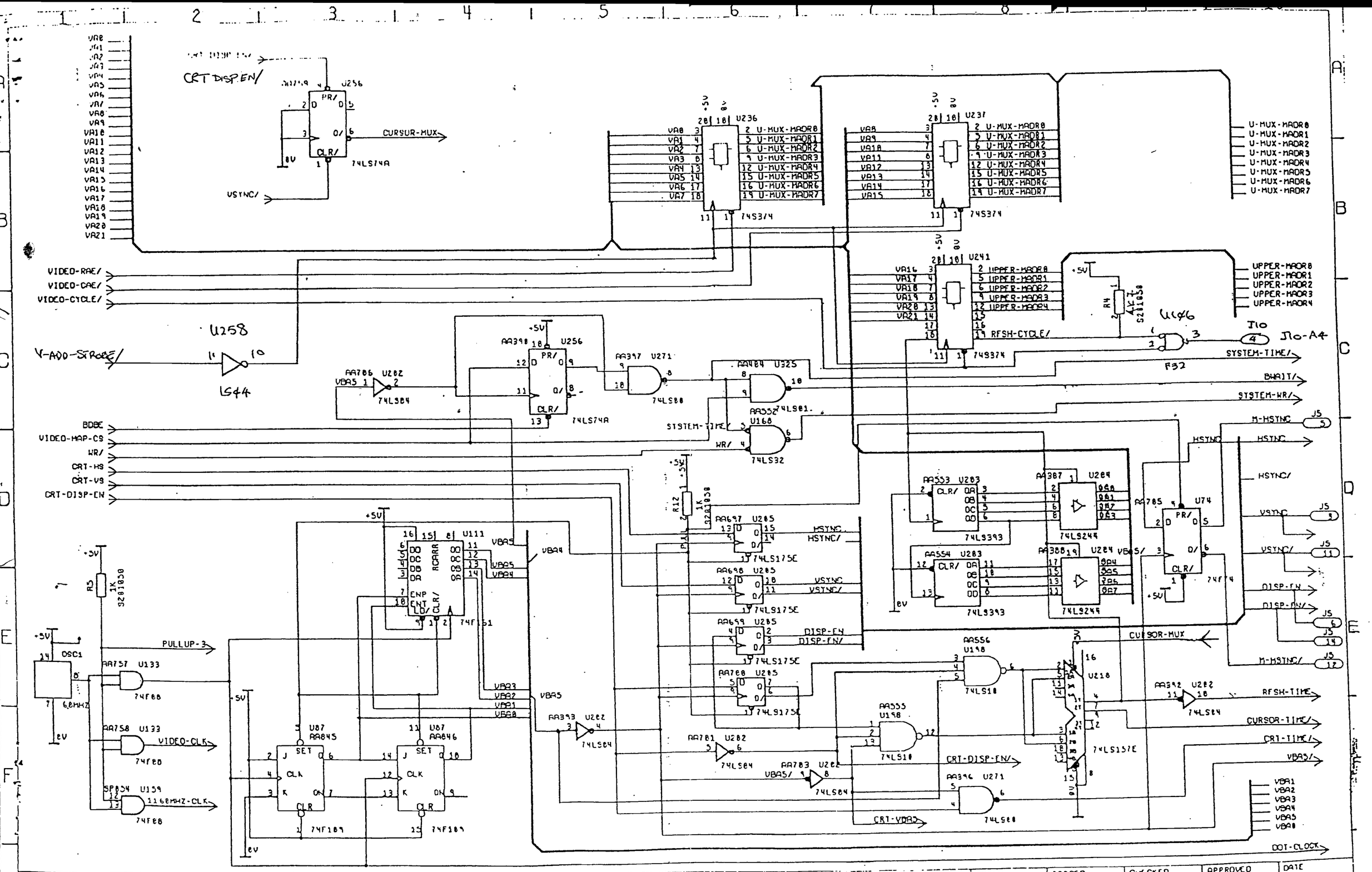

ISSUE	DESCRIPTION	APPD	DATE
3.1	CHANGES FOR ISSUE C PCB		

WHITECHAPEL
COMPUTER
WORKS

TITLE:
MILLIARD GARGANTUBRAIN
CRT CONTROLLER WITH DMA ACCESS

DRAWN	TRACED	CHECKED	APPROVED	DATE

DRAWING NO. W1AA-001-007

SHEET 2 OF 2A

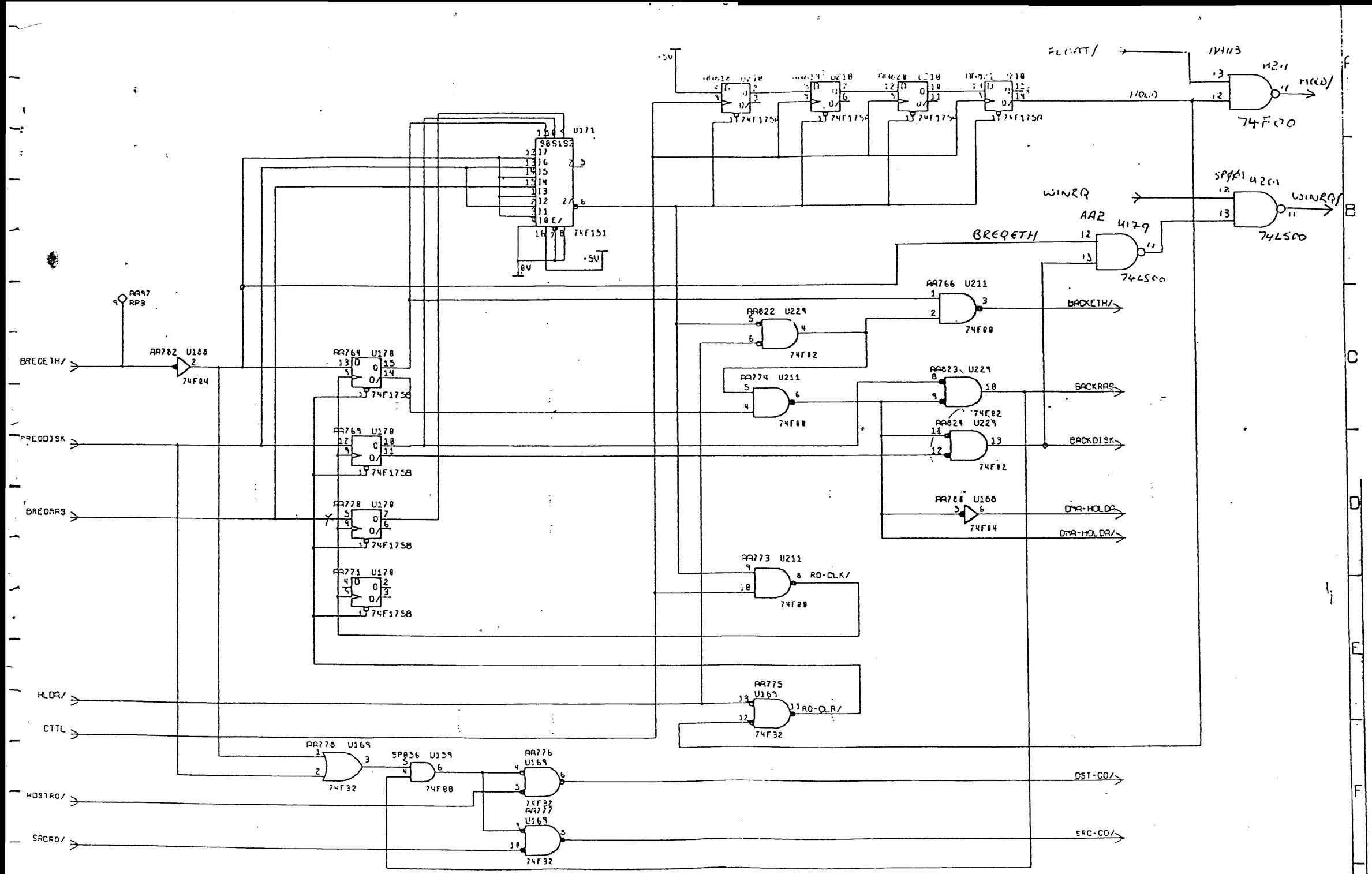

DESCRIPTION	APPD	DATE
CHANGES FOR ISSUE C PCB.		

WHITECHAPEL
COMPUTER
WORKS

TITLE:
MILLIARD GARGANTUBRAIN
BUS MASTER ARBITRATION

DRAWN	TRACED	CHECKED	APPROVED	DATE
	PTM			

DRAWING NO. W100-001-007

SHEET 26 OF 28

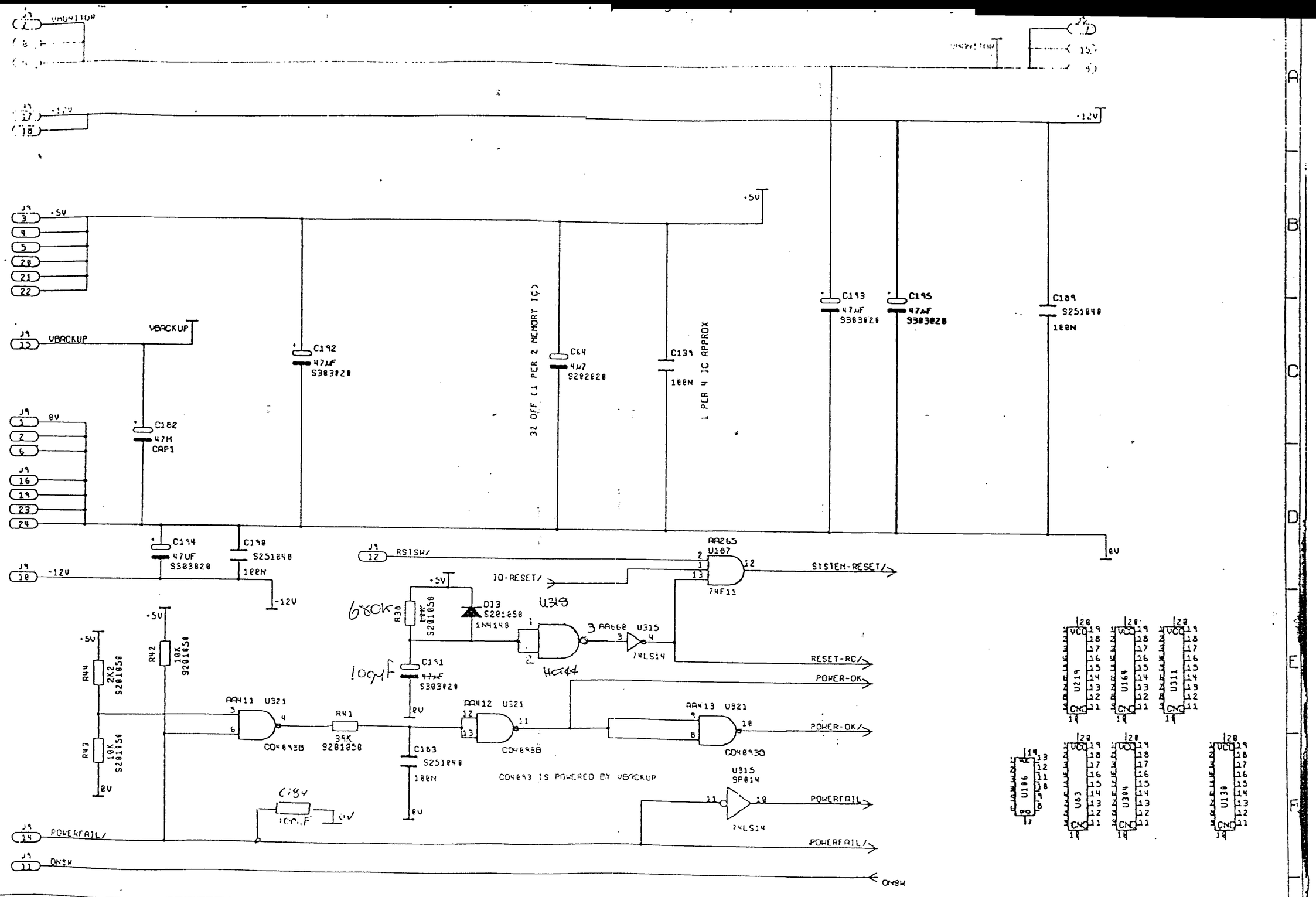

ISSUE	DESCRIPTION	APPD	DATE
3.1	CHANGES FOR ISSUE C PCB		

WHITECHAPEL COMPUTER WORKS

TITLE: MILLIARD GARGANTUBRAIN POWER DISTRIBUTION

DRAWN	TRACED	CHECKED	APPROVED	DATE
	ST			

DRAWING NO. W100-001-007

SHEET 27 OF 28

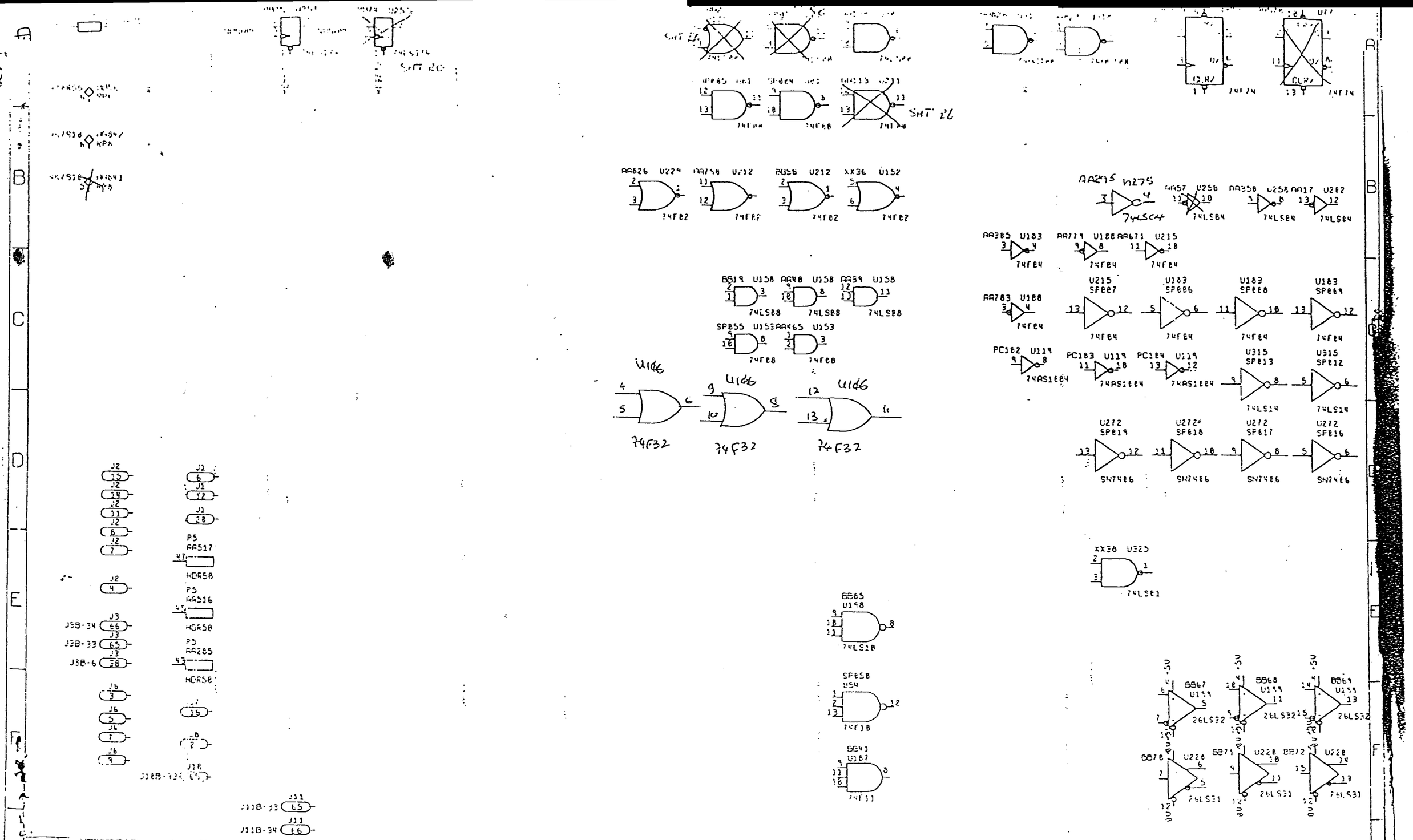

ISSUE	DESCRIPTION	APPD	DATE
3.1	CHANGES FOR ISSUE 3.1		

WHITECHAPEL
COMPUTER
WORKS

TITLE:
MILLIARD GARGANTUBRAIN
SPARES

DRAWN	TRACED	CHECKED	APPROVED	DATE
	SL			

DRAWING NO
W100-001-007